This is a digital copy of a book that was preserved for generations on library shelves before it was carefully scanned by Google as part of a project to make the world's books discoverable online.

It has survived long enough for the copyright to expire and the book to enter the public domain. A public domain book is one that was never subject to copyright or whose legal copyright term has expired. Whether a book is in the public domain may vary country to country. Public domain books are our gateways to the past, representing a wealth of history, culture and knowledge that's often difficult to discover.

Marks, notations and other marginalia present in the original volume will appear in this file - a reminder of this book's long journey from the publisher to a library and finally to you.

Usage guidelines

Google is proud to partner with libraries to digitize public domain materials and make them widely accessible. Public domain books belong to the public and we are merely their custodians. Nevertheless, this work is expensive, so in order to keep providing this resource, we have taken steps to prevent abuse by commercial parties, including placing technical restrictions on automated querying.

We also ask that you:

+ *Make non-commercial use of the files* We designed Google Book Search for use by individuals, and we request that you use these files for personal, non-commercial purposes.

+ *Refrain from automated querying* Do not send automated queries of any sort to Google's system: If you are conducting research on machine translation, optical character recognition or other areas where access to a large amount of text is helpful, please contact us. We encourage the use of public domain materials for these purposes and may be able to help.

+ *Maintain attribution* The Google "watermark" you see on each file is essential for informing people about this project and helping them find additional materials through Google Book Search. Please do not remove it.

+ *Keep it legal* Whatever your use, remember that you are responsible for ensuring that what you are doing is legal. Do not assume that just because we believe a book is in the public domain for users in the United States, that the work is also in the public domain for users in other countries. Whether a book is still in copyright varies from country to country, and we can't offer guidance on whether any specific use of any specific book is allowed. Please do not assume that a book's appearance in Google Book Search means it can be used in any manner anywhere in the world. Copyright infringement liability can be quite severe.

About Google Book Search

Google's mission is to organize the world's information and to make it universally accessible and useful. Google Book Search helps readers discover the world's books while helping authors and publishers reach new audiences. You can search through the full text of this book on the web at `http://books.google.com/`

YC 13806

LIBRARY
OF THE
UNIVERSITY OF CALIFORNIA.
Class

CONTRIBUTIONS

TO

PHOTOGRAPHIC OPTICS

CONTRIBUTIONS

TO

PHOTOGRAPHIC OPTICS

BY

OTTO LUMMER

DOCTOR OF PHILOSOPHY

PROFESSOR ASSISTANT IN THE REICHSANSTALT, BERLIN

TRANSLATED AND AUGMENTED

BY

SILVANUS P. THOMPSON

DOCTOR OF SCIENCE, FELLOW OF THE ROYAL SOCIETY, PRINCIPAL OF THE CITY AND GUILDS TECHNICAL COLLEGE, FINSBURY, LONDON

London

MACMILLAN AND CO., LIMITED

NEW YORK: THE MACMILLAN COMPANY

1900

All rights reserved

TR220
L8

PREFACE BY THE TRANSLATOR

THREE articles which appeared in the autumn of 1897 in the *Zeitschrift für Instrumentenkunde*, under the title of "Contributions to Photographic Optics," from the pen of Professor Otto Lummer of Berlin, attracted the attention of the present writer. They were found to give in concise form information not to be found elsewhere; and they presented that information in a manner so logical and so direct as to be of immediate value in scientific optics. Further, they contained an exposition of the remarkable theories of Professor L. von Seidel of Munich, whose work in the domain of geometrical optics, particularly in relation to the aberrations of lenses, was far too little known to optical writers. To those whose knowledge of theoretical optics has been gained from elementary text-books, and who may be dimly aware of something called spherical aberration, and of something else called chromatic aberration, it may come as a surprise to find that for the purposes of constructing good photographic lenses there are no fewer than *five* different kinds of aberration of sphericity and *two* different kinds of aberration of colour to be taken into account, as well as the chromatic differences of the spherical aberrations.

It may be claimed for Professor Lummer that he has, following von Seidel's mathematical theories, in these articles succeeded in making clear not only what these several aberrations are, but how they are combated and overcome in the construction of the modern photographic objective. One all-

*

important feature of these modern types of lens is that which has followed the introduction by Abbe and Schott of the new kinds of glass known as Jena glass, by the use of which certain advantages can be attained which are physically unattainable with any of the optical glasses previously known. This is not a question of any imaginary superiority of German glass over that of English or French manufacture; it is the discovery of glass having new physical properties, namely of new kinds of crown glass which, while having a lower dispersion than flint glass, have a *higher* instead of a *lower* refractivity. The discovery of this new optical property was followed by the discovery by Dr. P. Rudolph of a new principle of construction, which lies at the root of the recent improvements in camera lenses. The writer knows of no British text-book of optics in which Seidel's theory of the five aberrations is even mentioned. He knows of only one British text-book of optics in which Rudolph's principle is stated—and there it is stated incorrectly.

It therefore appeared well worth while to prepare an English translation of Professor Lummer's articles; and with his kind consent and willing co-operation the present version has been prepared. The translation does not profess to be merely a reproduction of the original. The text has been freely paraphrased, and elaborated in many places where the very conciseness of the original made some amplification desirable. No attempt is made to distinguish between the original text and the portions added by the translator; but the translator alone is responsible for Chapters XII. and XIII., which are additional. He is also responsible for Appendix I., in which is given a *résumé* of von Seidel's original mathematical investigation, and a brief notice of the subsequent work of Finsterwalder and others. Appendix II. is adopted almost piecemeal from Professor Lummer's edition of the *Optics* of Müller-Pouillet, as is also much of Appendix III., of which not the least valuable part is the example of the way of computing lenses actually used in practice.

Mention is made in a footnote to p. 6 of two works on optics which ought to be the familiar possession of every good student, namely Czapski's *Theory of Optical Instruments* (published in 1893 by Trewendt of Breslau), and the volume on *Optics* in the ninth (1895) edition of Müller-Pouillet's *Physics* (published by Vieweg of Brunswick), this latter being edited by Professor Lummer. Both these works are in German, and most unfortunately no translation of either has appeared—most unfortunately, for there is no English work in optics that is at all comparable to either of these. I say so deliberately, in spite of the admirable article by Lord Rayleigh on "Optics" in the *Encyclopaedia Britannica*, in spite of the existence of those excellent treatises, Heath's *Geometrical Optics* and Preston's *Theory of Light*. No doubt such books as Heath's *Geometrical Optics* and Parkinson's *Optics* are good in their way. They serve admirably to get up the subject for the Tripos; but they are far too academic, and too remote from the actual modern applications. In fact, the science of the best optical instrument-makers is far ahead of the science of the text-books. The article of Sir John Herschel "On Light" in the *Encyclopaedia Metropolitana* of 1840 marks the culminating point of English writers on optics.

The simple reason of the badness of almost all recent British text-books of optics is that, with the exception of one or two works on photographic optics, they are written from a totally false standpoint. They are written, not to teach the reader real optics, but *to enable him to pass examinations* set by non-optical examiners. The examination-curse lies over them all. Probably the reason why no English publisher has yet been found courageous enough to bring out translations of Czapski's *Optical Instruments* or Müller-Pouillet's *Optics* is that, even if translated, they would not command a large sale, because it would be useless for any student to cram himself up on them for an examination. The optical books which sell in England to-day are cram-books for university examinations. And so there is, to

those who know, little inducement to write treatises upon real optics.

The present treatise at least is not open to this unreality. It is for the scientific readers amongst the public to decide whether it succeeds in giving them something not to be found elsewhere, and something worthy of being known and studied.

The thanks of the translator are due to the various optical firms who have kindly furnished him with information of a valuable character. He also gratefully acknowledges the able assistance of Mr. J. Dennis Coales, who has helped in the work of preparing the translation.

CONTENTS

PAGE

PREFACE BY THE TRANSLATOR v

INTRODUCTORY, BY PROFESSOR LUMMER 1

CHAPTER I

ATTAINMENT OF A PERFECTLY SHARP IMAGE 3

CHAPTER II

SEIDEL'S THEORY OF THE FIVE ABERRATIONS 7

CHAPTER III

FORMATION OF IMAGES BY MEANS OF A SMALL APERTURE. PIN-HOLE CAMERA 14

CHAPTER IV

FORMATION OF THE IMAGE BY A SIMPLE CONVERGING LENS . . 19

CHAPTER V

INFLUENCE OF THE POSITION OF THE STOP UPON THE FLATNESS OF THE FIELD 24

CHAPTER VI

PAGE

THE CAUSE OF DISTORTION—CONDITIONS NECESSARY FOR DISTORTIONLESS PICTURES 29

CHAPTER VII

SYSTEMS CORRECTED FOR COLOUR AND SPHERICITY, CONSISTING OF TWO ASSOCIATED LENSES—OLD ACHROMATS 40

CHAPTER VIII

NEW ACHROMATS 47

CHAPTER IX

SEPARATION OF THE LENSES AS A MEANS OF PRODUCING ARTIFICIAL FLATTENING OF THE IMAGE 57

CHAPTER X

UNSYMMETRICAL OBJECTIVES CONSISTING OF TWO MEMBERS . . 59

CHAPTER XI

DOUBLE-OBJECTIVES CONSISTING OF TWO SYMMETRICAL MEMBERS WITH THE STOP BETWEEN THEM 68

CHAPTER XII

SOME RECENT BRITISH OBJECTIVES 85

CHAPTER XIII

TELE-PHOTOGRAPHIC LENSES 94

APPENDIX I

PAGE
SEIDEL'S THEORY OF THE FIVE ABERRATIONS 103

APPENDIX II

ON THE SINE-CONDITION 116

APPENDIX III

COMPUTATION OF LENSES 122

INDEX 131

LIBRARY OF THE UNIVERSITY OF CALIFORNIA

INTRODUCTORY

BY PROFESSOR OTTO LUMMER

In working up the subject of Photographic Optics for the ninth edition of the well-known text-book of physics of Müller-Pouillet, I looked about fruitlessly for a guide. In the literature pertaining to the topic I sought in vain for one which did not confuse the reader by an enumeration of the countless names given by makers to their lenses, or for one which, on the other hand, should lead him by logical and convincing reasoning to understand the chief advances of recent times, and the value of the several types of objectives. The practical performance of a lens-system, which is the only aspect needing consideration, is in the last resort only to be determined in the experimental way. Yet such an experimental test, if it stand alone, would be quite inadequate to explain the method and means by virtue of which the actual performance has been attained. It therefore appeared to me desirable to acquire a means of drawing a judgment, at least about the more important features in the possible performance of an objective, by applying theoretical considerations to the design, and to the various given items of construction, the kinds of glass, and the number of refracting surfaces employed.

In general, the more numerous the elements that are at one's disposal in the calculation—radii of curvature of the refracting surfaces, distances between components, kinds of glass, and the like—the more may the lens attain. If now one applies analysis to discover what are the conditions that may be satisfied when one has at one's disposal a given number of elements, and what are the conditions that must

be complied with in order to produce an image fulfilling the prescribed requirements of performance, one is henceforth in a position to draw a judgment as to the range of possibility in the performance of any given objective.

In endeavouring to sketch, within narrow compass, the whole of photographic optics, and to arrange the various kinds of objectives in typical groups, I am fully aware that such a beginning cannot succeed at once in being complete. There is still needed much computative work, and above all much experimental testing, in order to fill up the spaces left vacant, and to afford a substantial foundation to the systematic treatment of the subject.

CHAPTER I

ATTAINMENT OF A PERFECTLY SHARP IMAGE

In order to understand better the objective and its aberrations, we must first briefly consider the whole subject of the formation of images. So far as this aim of the optical system is concerned, it may be stated in mathematical language as follows: The two regions of space in front of the lens and behind it must be in *collinear* relation—that is to say, all rays proceeding from a point in one region must unite again in a corresponding point in the other region, in such a way, in fact, that any extended geometrical form in the object-space in front is precisely correlated to a similar geometrical form in the image-space behind the lens. Or, in other words, to every point in the object there shall correspond a conjugate point in the image, and *vice versa*. Of all optical systems there is only one that literally fulfils this condition, namely, the plane mirror; for only in the case of reflexion at a *plane* surface are these conditions of a point-to-point correspondence between the object-region and the image-region accurately fulfilled. But since this reflexion produces only a change of position, without magnification, and moreover only gives a *virtual* image, it is of no significance in photographic optics. In photography, optical systems are required which cast *real* images of objects, and which moreover cast them upon a flat surface, namely the photographic plate. One must therefore turn one's attention to *curved* reflecting or refracting surfaces. But of these it may be shown in general that they do not even produce a *small real* image, by means of wide-angled pencils (as is necessary for bright images), with accurate correspondence point for point

and accurately similar to the object. But rather, they produce a truly collinear image of extended flat objects, only if the delineating pencils are very *narrow*. Never, except in the special case—which, however, is of no importance in practical use—where the effective rays make indefinitely small angles with the principal axis of the system, that is to say, when both the visible *field* and the angular *aperture* of the system are small, does the formation of a truly collinear image occur.

Gauss, in treating the equations which express quite rigorously the elements of the refracted ray in terms of the elements of the incident ray and those of the refracting surfaces, developed the trigonometrical functions of the angle between the delineating rays and the axis in series of ascending powers [1] of the arc subtended. In so doing, and neglecting the third and higher powers, as being small relatively to the first power, he obtained simple equations for the production of a stigmatic [2] image in accordance with the well-known laws of geometrical optics, but accurate to a first approximation only. The formation of an exact image, according to these expressions of Gauss, is therefore only realised for rays which fall within an indefinitely *narrow* cylindrical space around the principal axis of a centred system of refracting or reflecting spherical surfaces.

Since the formation of images under such a limitation

[1] As is well known, the sines and cosines of angles may be expressed in terms of the corresponding angle (in radians) as follows :—

$$\sin \alpha = \alpha - \frac{\alpha^3}{1\cdot 2\cdot 3} + \frac{\alpha^5}{1\cdot 2\cdot 3\cdot 4\cdot 5} - \text{etc.},$$

$$\cos \alpha = 1 - \frac{\alpha^2}{1\cdot 2} + \frac{\alpha^4}{1\cdot 2\cdot 3\cdot 4} - \text{etc.}$$

Since for all angles less than 1 radian ($= 57° 17' 44''$) the value of α is a proper fraction, the values of α^2, α^3, α^4, α^5, etc., are still smaller fractions, so that the higher terms of these series diminish rapidly. Hence it is that for most purposes, even for angles over 30°, it suffices to neglect all terms after the second one in the developed series. For small angles all terms beyond the first may be neglected.

[2] The adjective *stigmatic* (Greek στίγμα, a point), as used in optics, refers to the accurate bringing of the rays of a pencil to focus at a point, in contradistinction to the inaccurate focussing of the rays which would cause them to meet in focal lines, as in the defect called *astigmatism*. Without the *stigmatic* reunion of the rays of a pencil, no lens can render as a point the image of a point-object. A *stigmatic* lens is one which will perform this. A *stigmatic* pencil is one which focusses or of which the rays meet accurately in a point. The adjective *anastigmatic* means devoid of astigmatism, and therefore really has the same signification as *stigmatic*.

(which virtually means always stopping-down the lens to the smallest aperture) is of no value for practical purposes, the endeavour was soon made to widen the limitations that beset the production of exact images, by resorting to the principle of the *division of work*. In other words, the duty of refracting the rays must be distributed over a number of separate surfaces, and the effects of their different curvatures and of the distances between them upon rays at different obliquities must be ascertained in order to decide what the various curvatures of the surfaces must be, and what must be their distances apart. Further, it was necessary to consider each combination with reference to the special duty required to be performed by it.

In *Microscope objectives* (and to a less degree in the objectives of highly magnifying *Telescopes*), one is dealing with the formation of images in relatively small fields of vision, but by the use of relatively wide-angled pencils. But if this be the limitation in this case, it is the endeavour, on the other hand, in the case of *Magnifying glasses, Eyepieces*, etc., to make the field of vision as large as possible, while sacrificing the angular width of the pencils. Upon the *combination* in one whole of two systems so constructed, depend, as is known, the great possibilities of the compound instruments—the Microscope and the Telescope.

Midway between these two special systems there lies a third, the *Camera lens* or *Photographic objective*, properly so called, which must of necessity both possess a large field of vision and form its images by means of wide-angled pencils. Naturally, to attain both the extension of field and the width of angular aperture (upon which latter, for a lens of given magnification, the brightness of the image and therefore the rapidity of the photographic action depends) one must sacrifice something; and in this case one deliberately renounces the production of the precise stigmatic reunion of the rays that is required in the microscope, in the telescope objective, and in the magnifying lens. Also, the design of the photographic system is modified in adaptation to different purposes (landscape lenses, portrait lenses, lenses for interiors, telephotographic lenses, etc.), according as great angular width of the aperture, or great extent of the field may be required.

In other words, the camera objective is constructed upon some pre-determined type, according as width of pencil or size of field is of the more importance. The conditions which must be satisfied[1] in their construction differ correspondingly in the different types of lens-system.

We are concerned here with photographic lens-systems only.

[1] The conditions which must be fulfilled by the *Microscope objective*, the *Magnifying glass*, the *eyepiece*, etc., are thoroughly treated in a German work by Dr. Siegfried Czapski, *Theory of Optical Instruments according to Professor E. Abbe* (published by E. Trewendt of Breslau, 1893). This work forms one section of Winkelmann's *Handbook of Physics*, but can be purchased separately. A less exhaustive modern treatise on this branch of optics will be found in the new (ninth) edition of Müller-Pouillet's *Physics*, of which vol. ii., edited by Professor O. Lummer, is devoted to Optics. It is a great pity that neither of these works has yet been translated into English.

CHAPTER II

SEIDEL'S THEORY OF THE FIVE ABERRATIONS

IN order to formulate, at least to a first approximation, the conditions to be fulfilled in the construction of these types of lens-systems, we will resort to the theory of formation of images as treated by L. von Seidel, whose works on this topic date back to the years 1855 and 1856.[1] Seidel's theory, as we may name it, takes into consideration all those rays which cross the principal axis at angles so great that the *third* powers, in the developed series of the sines and cosines of these angles, must be included in the calculation, while the fifth and higher powers may still be neglected as not materially influencing the result. L. von Seidel developed his theory so far that one can deduce the influence both of the angular aperture and of the width of the field of vision upon the perfection of the image, from the relation found for conjugate rays before and after refraction.

By selecting appropriately the terms in the calculations for conjugate rays he obtains formulæ for the *correcting terms*, which have to be added to Gauss's terms in those cases where third powers as well as first powers must be taken into account—that is to say, cases where, beside the axial rays or the paraxial rays, *oblique* rays also contribute to the formation

[1] L. von Seidel's writings on geometrical optics appear to be quite unknown in England. The principal of them were published in the *Astronomischen Nachrichten* (Altona), in Nos. 835, 871, 1027-1029 of that publication. Von Seidel also gave a non-mathematical exposition of the Theory of Aberrations and the mathematical conditions for their elimination, in vol. i. of the *Abhandlungen der Naturwissenschaftlich-technischen Commission bei der königlichen bayerischen Akademie der Wissenschaften in München* (München, 1857). See also Appendix II.

of the image. [Axial rays here mean those that are close to the principal axis; and paraxial those which, though not near the principal axis, are nearly parallel to it.] In the formulæ for these correcting terms there occur only *five* non-identical sums, which sums are to be multiplied into the terms that are dependent upon the co-ordinates of the incident rays. In order to annul in the plane of the image all aberrations of the *third* order, for all combinations of the co-ordinates of the incident rays, one has therefore *five* equations at one's disposal. If we denote these five sums by the symbols S_1, S_2, S_3, S_4, and S_5, we may state the main proposition of the theory as follows: Given an object in a plane perpendicular to the axis, its image (produced by von Seidel's rays) will be *sharply defined, flat*, and *undistorted* (and identical with the hypothetical image of Gauss's theory) if, and only if, all the sums S_1 to S_5 are severally nul.

In correspondence with the five sums S_1 to S_5 we may distinguish *five* aberrations. Each kind of aberration will disappear if the construction of the lens is such that the corresponding "sum" or coefficient of the correcting terms is zero. Suppose the construction of the lens-system is such that $S_1 = 0$; in that case there will be no *spherical aberration* in the axis, as ordinarily understood. The amount of axial spherical aberration is (as is well known) proportional to the *third* power of the linear aperture. Everybody knows that a lens that has spherical aberration will not give a sharp image of a bright point, and that the definition is improved by introducing a "stop" to cut off all light except that which passes through the central region of the lens. But if the lens is so designed as to fulfil the condition $S_1 = 0$, no such stop will be necessary to secure sharp definition at the centre of the plate—and, as the full aperture is thus available, the time of exposure is greatly shortened. A lens, however, may be constructed to fulfil this condition without being by any means perfect. Accurate definition at the middle of the picture is desirable, but other errors may still be present. For example, there may be *coma*[1] at all the other parts of the image; worst, of course, at the margins. If the construction

[1] Coma is a pear-shaped or comma-shaped blur of light extending from, and partly surrounding, the image of a bright point.

of the lens is such that not only $S_1 = 0$, but $S_2 = 0$ also, then the defect called coma subsides into the less objectionable defect which may be called *radial astigmatism.*[1] To every point lying outside the axis there are found to correspond *two short focal lines,* situated at different distances behind the lens, and occupying positions at right angles to one another. For instance, if the object is a bright point considerably *below* the level of the principal axis, such as would form an image at some point on the focussing screen *above* the middle of the picture, it will be found that if the screen is pushed too near in, the image will be distorted into a short bright line in a horizontal position; while if the screen is drawn further back, the image will be a short bright line in a vertical position. Between these two positions the image will be a luminous patch of intermediate shape, but will not be an exact point at *any* distance of the screen. It will further be found that if the point that is acting as object is moved to greater and greater

[1] The term *astigmatism* is applied to the property possessed by cylindrical lenses, and combinations of cylindrical with spherical lenses, of bringing a beam of light to a *focal line* instead of a *focal point.* The eyes of many persons, owing to the curvature of the cornea being unequal in different meridians about the axis, possess this defect. It can be remedied by applying cylindrical lenses having an equal and opposite amount of astigmatism. The adjective *astigmatic* is rightly applied to cylindrical lenses, since its etymological meaning is "not bringing to a point," which is the correlative to *stigmatic,* which means "bringing to a point." Any person can readily imitate for himself the defect of true astigmatism by putting in front of his eye a thin cylindrical lens, either positive or negative, having a power of say +1 dioptrie or −1 dioptrie. An eye thus rendered astigmatic, or a naturally astigmatic eye, when directed to an object having lines in different directions upon it, will see some of these in focus, and others not in focus. For example, if a normal eye is covered by a positive cylindrical lens with its axis vertical, and is directed toward a window, the horizontal window-bars may appear quite sharp, but the vertical bars blurred and out of focus.

No camera lens ever has *astigmatism* in this sense. The sense in which some writers on camera lenses use the term is quite different. Oblique rays going through the lens may fail to be brought stigmatically to an exact point; they may, according to circumstances, give a blur or *coma,* or they may give focal lines at different distances: a short tangential line nearer in toward the lens, and a short radial line further out, as explained in the text lower down. It is to this that the term *radial astigmatism* applies. A camera lens having this defect produces at the margins of the picture a streaky effect for objects which (for example, the foliage of trees) have a multitude of small points. There will be a kind of concentric streakiness if the plate is too near in, and a kind of radiating streakiness if the plate is further out—the central part being all the time fairly well defined.

LIBRARY OF THE UNIVERSITY OF CALIFORNIA

distances away from the principal axis, the distance which separates these two *focal lines* (as measured along the chief ray of the pencil, or oblique secondary axis) increases by a disproportionately great amount. It becomes more than twice as great, when the lateral distance of the point-object from the axis is doubled. The aberration S_2, to which coma is due, is proportional to the square of the aperture and to the simple distance of the point-object from the axis. Moreover, to the various point-objects in a plane perpendicular to the axis, there correspond two sets of images which lie in two separate curved surfaces—one surface containing all the little tangential line-images, the other surface containing all the little radial line-images. These two curved surfaces touch each other at the point where they cross the principal axis, namely, at that point where the axis meets the theoretical image-plane which (on Gauss's theory) is the conjugate plane corresponding to the object-plane. Now, if we could get rid of this radial astigmatism, the two little focal lines or line-images would retreat toward one another, and merge into one sharp point-image; and at the same time the two curved surfaces just spoken of would merge into a single focal surface. In fact, to remove radial astigmatism, and produce on a single focal surface stigmatically sharp images, we must so construct the lens as to fulfil the new condition $S_3 = 0$. But the focal surface, though now united into one, is still curved; and, as we cannot use curved or dished photographic plates in the camera, there will still be bad definition either at the margins or at the centre of the flat screen. To remove this aberration of *curvature of focal surface* we have to design the lens-system so as to fulfil the fourth condition, namely, so that $S_4 = 0$. Then, and then only, when all these four conditions are fulfilled in the construction of the lens-system, shall we obtain a sharp, stigmatic, flat image, with equally good definition all over the plate, the image then really occupying the focal *plane* assumed in the theory of Gauss. Both the aberrations corresponding to S_3 and S_4 are proportional to the linear aperture, but also proportional to the square of the size or lateral extension; or, strictly, to the square of the tangent of the angle subtended by the object. There is left only one single aberration of the third order which may still affect the image, namely *distortion*

of the marginal parts. To remove this the construction must be such as to fulfil the fifth condition, namely $S_5 = 0$. This aberration is proportional to the third power of the distance of the object.

The condition $S_2 = 0$ is identical with the so-called "sine-condition"[1] for small apertures, which may be expressed verbally by saying that it requires that all zones of an objective should possess equal focal lengths; or, in other terms, that every ray proceeding from an element of a surface should be brought by the system to a conjugate element of a surface. Since Frauenhofer fulfilled the condition $S_2 = 0$ in his celebrated heliometer objective, von Seidel calls this Frauenhofer's condition. It may be equally expressed by saying that if the spherical aberration for rays parallel to the axis has been removed ($S_2 = 0$), it has also been eliminated for *oblique* pencils of the same cross-section as the axial pencil. If S_2 is *not* zero, then the oblique pencil exhibits the one-sided blur or patch of light known as *coma*.

If one wished to investigate the formation of images up to the seventh, ninth, or higher powers of the angle, then some further equations of condition,[2] which must be fulfilled in order that a plane object should yield a sharp, flat, and undistorted image, must be obtained.

Let us pause on von Seidel's theory of the formation of images, and assume forthwith that there exists a lens-system free from the five possible aberrations of the third order with which it deals. Then such a lens-system does produce a faultless image of an object situated in a plane at a certain distance from the system; but on the other hand, if the same lens-system is set to produce an image of any other plane lying nearer or further, that image *will again be subject to aberrations of the third order*. In other words, the lens so corrected is truly accurate only for one particular distance. If it is required to form images of objects at all distances, taking into consideration aberrations of the fifth order, then there arise in addition to von Seidel's five equations other new ones, of which one in

[1] See Appendix I.

[2] Compare the memoir of M. Thiesen entitled "Contributions to Dioptrics" in the *Sitzungsberichte der Berliner Akademie*, 1890, p. 799. An abstract of Thiesen's theory, which includes that of Seidel, has been given by Professor Lummer in Müller-Pouillet's *Physics* (9th edition), vol. ii. (on Optics), pp. 522-25.

particular is known as Herschel's equation.[1] This condition is in curious contradiction to the second of von Seidel's conditions ($S_2 = 0$), being related to it in such a way that in general, if the construction is such that one of the two is fulfilled, the other is not, and *vice versa*. This implies that if we would have a lens free from distortion, and giving a flat field that can be used for *all* distances, we shall be compelled to sacrifice definition a little, allowing a slight coma at every distance; or, if we insist on absolute precision of definition, we shall not be able to use the lens for all distances.

But, though nothing has yet been said as to the points in construction implied in each of these five conditions, it must be understood that this production of an image free from aberrations of the third order, and in a flat plane, can only be attained by combining in the lens-system a sufficient number of *separated* surfaces. Each new condition to be fulfilled practically means an additional refracting surface to carry out the correction imported. If one were to set down the distances of the various refracting surfaces from one another as all equal to zero, then, assuming a like refractivity for the first and last media (for example, air in front of and behind the lens), the conditions S_1 to S_5 can only be fulfilled by taking the focal length of the combination as infinitely great—in fact, either a plane mirror or a flat sheet of glass without thickness. The *distance* between the two adjacent refracting surfaces (*i.e.* the thickness of the lenses), and likewise that between the separate components (as when the camera objective is made of two separated members), are therefore essential factors in the attainment of precision of the highest order in the formation of images.

In addition to these aberrations, all of which might occur even when *monochromatic* light is used, there must be considered those which, when *white* light is used, arise as a result of *dispersion*. Of these the most important are the chromatism of the positions of the images, and the chromatism of the true focal lengths. The former has the result of causing the images for different colours to occupy different *places* upon

[1] Von Seidel himself draws attention to this in the *Astronomischen Nachrichten*, No. 1029, p. 326, 1856.

the axis; it is inseparable from Gauss's theory of formation of images. The chromatism of the focal lengths produces a different *size* of the image for the different colours. The commonly-used term "chromatic aberration" includes both of these really different aberrations.

CHAPTER III

FORMATION OF IMAGES BY MEANS OF A SMALL APERTURE. PIN-HOLE CAMERA

THAT we may the better appreciate the performance of appliances devised by human ingenuity, let us very briefly consider the simplest method of forming an image, a method which Nature, as it were, offers us of herself—*the formation of an image by means of a small hole.*

Pin-hole images are essentially a consequence of the *rectilinear* propagation of light, which doctrine finds its expres-

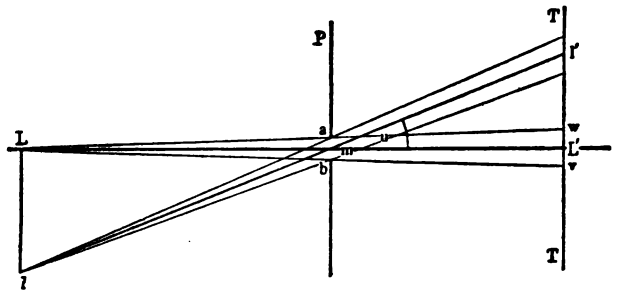

FIG. 1.—Formation of an Image in the Pin-hole Camera.

sion in the saying that *light is propagated in the form of rays.* Assuming this as a general principle, the process of the formation by straight rays is shown diagrammatically in Fig. 1. Here P represents an opaque screen with the aperture *a b* for forming an image, L *l* the object, and TT the intercepting screen on which the image is received. Light from any single point of the object falls on the screen through the aperture only. Consequently, corresponding to each point of the

object there is produced a bright *spot*, which is situated on the line drawn from the point on the object to the middle of the aperture, and which is similar in its shape to the shape of the aperture. A round aperture naturally produces round spots. The farther the object is moved away from the aperture, the smaller is the spot of light on the screen corresponding to each point of the object; since for an object at an infinite distance the size of the spot would become equal to that of the aperture. Thus there arises, to a certain extent, a point-for-point formation of image, in which to each point of the object there coresponds, as an image, a small bright spot or disc of at least the same size as the aperture. So far, then, the image produced in a pin-hole camera resembles the more or less badly focussed image due to a converging lens.

The greater the distance of the screen from the aperture, the less do the discs corresponding to the various points of the object overlap each other, and the clearer are the details of the image, because, at least in the case of an object at a great distance, the diameter of the spots varies only slightly with the distance of the screen. Here we have the reason why the pin-hole camera delineates objects at widely different distances with equal clearness; it possesses, as photographers would say, great "depth" of focus. Consequently the definition of the image does not depend on the flatness of the screen; and however much the screen is curved, one can always obtain an equally sharp image. But, of course, the geometrical similarity of the image with the object is dependent on the form of the screen, and will be altered if the screen is bent. Only when the screen is *flat*, and its surface *parallel* to the plane of the object, is an image obtained which is perfectly *similar* to the object, and which is free from distortion up to the extreme margin of the field. It is just because of these desirable properties of the pin-hole camera that "photography without a lens" has been made use of, until quite recently, in order to take pictures of architectural buildings, churches with high towers, and the like; for in these instances it is necessary that the picture should be in correct perspective, *angle-true*, with a field of view of wide extent, and *free from distortion*. For such objects the very prolonged time of exposure of the plate is

relatively unimportant compared with width of angle and undistorted perspective.

Besides its capability of giving *angle-true* or *orthoscopic* delineation, and its extraordinary depth of focus, the pin-hole camera possesses, as just remarked, a very wide field of view. If in spite of its simplicity it has henceforth to give place to the new wide-angle systems of lenses of complicated and costly structure, the reason must be sought in the far inferior brightness and in the poor definition of the images it yields.

If the theory of the rectilinear propagation of light were strictly true, then the sharpness of definition of pin-hole pictures would increase directly with the diminution of the size of the pin-hole; though the amount of light admitted would of course be proportionately diminished.

But in reality light consists of *waves*, not of *rays;* and its propagation only appears to be rectilinear, when taken in the gross, because the waves themselves are of such minute dimensions. Whenever one begins to deal with small apertures, pin-holes, or narrow slits, one at once discovers that though some of the light does indeed travel in straight lines, some of its waves also spread laterally, giving rise to diffraction "fringes" and other phenomena of "interference" characteristic of wave propagation. The only strictly tenable definition of a "ray" of light is that it is the path along which waves are marching. Rays of light in the old physical sense do not exist. *Diffraction*, or the apparent spreading of the waves of light into the margins of the geometrical body, or bending round into the shadows of narrow objects such as pins or hairs, is an absolute disproof of the "ray" theory. And the existence of diffraction is a matter which, in the theory of the microscope, and in the theory of the resolving power of the telescope, it is as necessary to take into account as either refraction or dispersion.[1]

With the use of a relatively *small* aperture the effects of this diffraction begin to assert themselves. The smaller the aperture the more evident becomes the lateral spreading of the

[1] See a remarkable article on the Diffraction Theory in Geometrical Optics, by Dr. K. Strehl, in the *Zeitschrift für Instrumentenkunde*, December 1899, p. 364. See also the articles on *Optics*, and on *Wave-Theory*, by Lord Rayleigh in the *Encyclopaedia Britannica*. Lord Rayleigh's articles in the *Philosophical Magazine* for 1879, 1880, and 1885 should also be consulted.

light-waves; so that if in the vain attempt to isolate a single "ray" of light we make the pin-hole smaller and smaller, the little disc of light which is cast on the screen begins to appear surrounded with diffraction halos and faint fringes of colour; so that the attempt to reduce the size of the pin-hole below a certain limit defeats itself. For while, down to a certain degree, diminishing the size of the pin-hole sharpens the image, after that limit has been attained, any further decrease in size of the pin-hole will reduce the sharpness of the definition, until finally, when the size of the aperture[1] becomes of the order of magnitude of one wave-length, the sharpness of the image is quite lost.

The assumption of a rectilinear propagation of light is in fact an abstraction, which only holds good in the case of *undisturbed* propagation in one and the same medium. But even then, both in the case of the formation of the image by

[1] It may be convenient to mention the sizes of some sewing needles of a standard firm of manufacturers, Messrs. Milward of Redditch. According to Mr. Dallmeyer these have the following diameters, in mils. (1 mil. $=\frac{1}{1000}$ of an inch):—

No. 1	46 mils.	No. 7	26 mils.
2	42 ,,	8	23 ,,
3	38 ,,	9	20 ,,
4	36 ,,	10	18 ,,
5	32 ,,	11	16 ,,
6	29 ,,	12	14 ,,

The size of a wave-length of light varies from 32 millionths of an inch for the extremest red, down to 14·4 millionths for the extremest violet visible. One may take 16 millionths as about the size of the wave-length of blue light to which the photographic film is most sensitive. The distance of the plate from the pin-hole, to give the best concentration of light in the diffraction disc that is the image of a point, can be calculated by dividing the square of the diameter of the hole by four times the wave-length. Thus, if a No. 9 needle were used to make the pin-hole, the hole being 20 mils. in diameter, the calculation would be—

$$\text{best distance of screen} = \frac{0{\cdot}020 \times 0{\cdot}020}{4 \times 0{\cdot}000016}$$
$$= \frac{0{\cdot}000400}{0{\cdot}000064}$$
$$= \frac{400}{64}$$
$$= 6 \text{ inches, approximately.}$$

The reader should also consult a paper on Pin-hole Photography by Captain Sir William Abney, F.R.S., in the *Camera Club Journal*, May 1890; also Mr. Dallmeyer's *Telephotography*, p. 15.

a pin-hole camera, and in that by a lens-system, a complete solution of the problem *on the principle of the diffraction theory* is only possible by the aid of the higher mathematics. By its aid it is possible, in the case of the pin-hole camera, to find a formula for the particular *numerical* relation between the size of the aperture employed, the distance of the point-object from it, and the size of the resulting discs of light. So also one obtains the formula for calculating the best size of pin-hole to use for a given length of camera-body. Little practical importance, however, attaches to the elementary method of calculation hitherto in vogue, even if it suffices to predetermine the changes in appearance that occur when the size of the aperture is changed. The elementary formula, published indeed long ago by Petzval, shows that the distance of the screen suitable to give the sharpest image with an aperture of 0·3 millimetre should be 50 millimetres; whilst, according to the actual experiments of A. Wagner, the best distance for this same aperture amounts to about 100 millimetres. Admitting, however, the validity of these approximate figures, then a simple calculation shows that a Petzval portrait-objective which, with an aperture of 8 centimetres and a focal length of 30 centimetres, permits of a tenfold magnification in the image, surpasses the pin-hole camera, with respect to the brightness of the image, about 18,000 times, and surpasses it also in respect of sharpness of definition about 180 times; the distance of the image from the aperture being the same. In the modern portrait-objectives which produce brightly-illuminated pictures, and which, for a focal length of 30 centimetres, can be used with an aperture up to 12 centimetres (*i.e.* with $f/2{\cdot}5$), the brightness of the image is approximately 40,000 times as great as that of the pin-hole camera, that is to say, such an objective is 40,000 times more rapid.

CHAPTER IV

FORMATION OF THE IMAGE BY A SIMPLE CONVERGING LENS

By placing a simple magnifying lens behind the aperture of a camera, Giambattista della Porta led the way towards the photographic optics of to-day. Imperfect as is the image produced by a single simple lens, yet at that date its introduction signified a forward step. For the lens at once lessened the two chief defects of the pin-hole camera, since it produced an image which was relatively sharp, and above all bright. Both these advantages follow from the property possessed by refracting spherical surfaces, of causing all rays proceeding from a point to intersect again, approximately, in another point; that is to say, such surfaces convert homocentric (divergent) pencils of rays into other homocentric (convergent) pencils.

Let it be assumed that a single lens may actually bring about such a stigmatic reuniting of the rays from a luminous point serving as object. Yet even then, the image is not itself really a point, but is a more or less extended small bright *disc*. A lens-system which, according to its geometrical construction, would, on the ray theory, bring a homocentric pencil to reunite in one definite point will, according to the wave theory, accomplish nothing more than convert the spherical wave-surfaces of rays that emanate from a self-luminous point into other wave-surfaces, also spherical and apparently emanating from or advancing toward *another* centre. Now the theory of diffraction shows, in accordance with the principle of the interference of small wave-elements proceeding from the effective portion of the wave-surface, that a spherical wave-surface produces in the plane of its vertex a small disc of light surrounded by alternate bright and dark rings. Every astron-

omical observer is familiar with the spurious discs shown by even the best telescopes when accurately focussed upon a star. These are examples of the action of diffraction in preventing any accurate point-image from being formed at the focus. Such diffraction discs decrease in brightness from their middle to their edge. Their diameter depends upon the ratio of the aperture to the focal length of the lens. The greater the ratio, the more nearly does the diffraction disc shrink down to a point-image. As understood in the wave theory, the point-image is merely the *limit* toward which the distribution of the light in the plane of the vertex (of the wave-surfaces emerging from the optical system) approximates as the operative portion of the emergent wave-surface is increased in area.

Physical optics recognises no other meaning than this to the term a "point-image."

To endeavour to separate diffraction from the formation of images would be to separate the effect from the cause. Yet in spite of this one frequently meets with erroneous statements upon the influence of diffraction, as if it were a kind of interloper which under certain circumstances might be avoided, or which was only produced primarily by the light grazing against the edge of the stop.

If the supposition that the optical system, speaking according to the language of geometrical optics, causes homocentric pencils to reunite in one point, does not prove to be correct in fact (that is to say, if there in fact is spherical aberration), then it follows that the actual operative wave-surface which emerges from the lens possesses a form not truly spherical; and the consequence of this is that the lens-system produces a faulty formation of images, such faults being what we term *aberrations*. In order to acquire an understanding of the formation of the image in this case, one must ascertain the *form* of the wave-surface, so as to calculate the diffraction effect produced by the operative part of the wave-surface. In particular, what is wanted to be known is the diffraction effect at the place where, according to the elementary theory of Gauss, the simple point-image ought to be produced. This calculation is not simple; nor indeed is it possible for every form of the wave-surface.[1]

[1] K. Strehl has recently undertaken a detailed study of the question what sort of a distribution of the light is produced in the focal plane at the place of

So far as a simple converging lens can succeed in effecting a precise reuniting of the rays in a point, the reduction to a minimum of the aberrations due to sphericity is attainable only by the use of highly refractive materials, and by the choice of an appropriate form for the lens.

In consequence of the chromatic dispersion of the light, there always occurs, even with as small an aperture as one may select, some want of definition; and the aberrations due to sphericity, when the aperture is relatively small and the light employed is monochromatic, are negligibly small in comparison with the chromatic aberration. The circle of aberration due to the chromatic dispersion is in fact of a diameter about equal to one-thirty-third [1] of that of the aperture of the lens.

In consequence of this chromatic aberration, the image formed by a single glass lens is not much superior to that formed by the pin-hole camera. If one takes into account only the diffraction effect (upon the assumption of a refraction that is stigmatically accurate) and the circle of aberration due to dispersion, an approximate calculation shows that the badness of the definition [2] of a single lens is a minimum when with an aperture of 3 millimetres there is used an aperture ratio of $f/100$. This *minimum* of definition gives for this aperture a disc of about 0·244 millimetres in diameter as the image of a point.

the theoretical point-image of Gauss, or in the neighbourhood of the focus, by a *non-spherical* wave-surface. See K. Strehl, *Theory of the Telescope on the Basis of Diffraction* (Leipzig, 1894), and abstracts of his work published in the *Zeitschrift für Instrumentenkunde*.

[1] This was the reason why, at the time when achromatism appeared to be unattainable, lenses of enormously long focal length were employed, and why also people abandoned refracting systems and turned to reflecting telescopes. These so-called *aberrationless* surfaces have, however, at the best found no application except in certain very special cases—for example, in search-light mirrors to which a paraboloidal instead of a spherical form is given. That they have found so little other use is due to the circumstance that they are not *aplanatic* in Abbe's sense of the term, and do not give images free from aberration except at the one predetermined point on the axis, not even at points a little on one side in the focal plane. *This* can only be attained, according to von Seidel's theory, if beside S_1 being $=0$, S_2 is also $=0$. In other words, they are not truly aplanatic unless they also fulfil Frauenhofer's condition—that is to say, unless the *sine-condition* (see p. 2 above) is fulfilled for pencils of all and every width.

[2] The author here takes as a measure of the badness of definition the diameter of the small spot or *disc* of light which is formed, instead of a true *point*, as the image of a luminous point-object.

The image formed by a single glass lens is therefore superior to that of a pin-hole, about twenty-fourfold in brightness, and about fivefold in definition.[1]

By the substitution of a simple converging lens instead of a mere hole, two of the most important properties—brilliancy and definition of the image—have been then somewhat enhanced. But this augmentation is not such as to be of very direct importance, and it has been bought dearly enough, since there are brought in certain fresh disadvantages inseparable from the introduction of the lens.

In the first place, the sharpest image of an object is formed only at a quite definite position, the location of which varies with the distance of the object; while in the case of the pin-hole camera—at least for all objects that are a moderate distance away—the image is equally sharp for all distances of the plate from the pin-hole. The "depth" of image in the case of the lens is very limited. Any slight displacement of the focussing screen toward or from the lens spoils the sharpness of the picture.

Secondly, as a further consequence of dispersion, the single lens possesses a so-called *chemical focus.* It is well known that the chemical actions of light, in which all photography consists, are not produced equally by rays of all the different colours. While the eye is sensitive to all the colours from red to violet of the visible spectrum, it is most sensitive to those of yellow and yellowish green in the mid-region of the spectrum. On the other hand, the silver-salts used in the preparation of photographic plates and films are hardly sensitive at all to red or orange; their range usually extends from yellow, through green, blue, and violet, right into the ultra-violet region of the spectrum, and therefore includes certain kinds of light to which the human eye is insensitive, and which are therefore invisible. These "ultra-violet" or "chemical" or "actinic" rays are of shorter wave-length than any that the eye can see, consequently they are more refracted

[1] A comparison such as this between the performance of the pin-hole camera, that of a single lens, and that of a double achromatic lens, with respect to brightness and definition of images, has already been made by Petzval. See his *Report on the Results of Certain Dioptric Investigations*, published at Pesth in 1843. See also an excellent pamphlet entitled *The Principles of a Photographic Lens simply explained*, by Mr. Conrad Beck (1899).

by glass than even the most refrangible (violet) of the visible rays. Hence a simple glass lens, of which the focal length for violet light is shorter than that for red light, has a still shorter focal length for these ultra-violet or chemical rays.

This fault makes itself evident in the following way:—If the focussing of the picture on the screen has been made as sharp as possible to the eye, and the sensitive plate is then substituted at exactly the same position, the picture so taken will seem badly focussed, because the chemical focus lies a little nearer to the lens than the visual focus.

Both these defects, the want of focal "depth" and the aberration due to chromatic differences in the focal length, are lessened by diminishing the aperture of the lens. And since already on account of spherical aberration no great aperture can be permitted, it follows that these aberrations will also be of relatively small importance in comparison with those that occur with *oblique* pencils. Such pencils must necessarily be used in taking photographs of extended objects that occupy a wide field of view, since the rays from the lateral parts of such objects must enter the lens obliquely.

In the formation of extended images by a simple glass lens with a small aperture, there come in therefore the special aberrations due to obliquity, of which the three chief ones are *Radial Astigmatism* (see p. 9 above), *Curvature of the plane of the Image*, and *Distortion*, all of which occur the more markedly the greater the obliquity of the pencils—that is to say, the wider the field of view.

For the elimination of these aberrations one cannot do much, at least by any method of compensation. Yet a diminution of them may be obtained by choosing a suitable form (meniscus) for the lens, and by adopting an appropriate method of "stopping down" the aperture (front stop).

While a meniscus lens (a positive meniscus with the concave side outwards), by virtue of its form, yields a sharp image over a wider field than does the ordinary bi-convex form of lens, the stop set in front of the lens at a suitable distance causes the best image that the lens can give—imperfect though that be—to come to focus *in one plane* as a *flat* picture.

CHAPTER V

INFLUENCE OF THE POSITION OF THE STOP UPON THE FLATNESS OF THE FIELD

In order to comprehend the influence of the position of the stop upon the situation of those points of the image which are not on the axis, one must recollect the property called *radial astigmatism* (see footnote to p. 9 above). In virtue of this property, a pencil of light proceeding from some lateral point of an object as its source, and traversing the lens *obliquely*, produces instead of a point-image two *focal lines*, m_1, m_2 (Fig. 2), separated from each other by a short distance called "the astigmatic difference." The focal lines m_1 and m_2 corresponding to the various points of the object always lie on curved surfaces K_1 and K_2, which touch each other at their common point of intersection E with the axis. These focal lines show themselves sharply on the nearer surface K_1 as bits of concentric circles or *tangential line-elements*, and on the further surface K_2 as bits of radii or *radial line-elements*. No

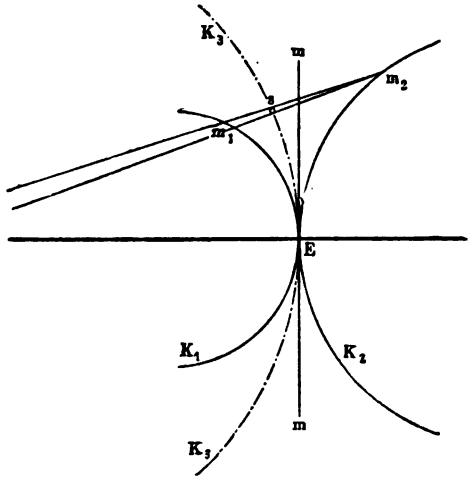

FIG. 2.—Radial Astigmatism of Oblique Pencil, causing two Curved Focal Surfaces.

sharp image is formed of either the tangential or the radial focal lines on a plane photographic plate inserted at the theoretical focus E; but instead, each oblique pencil produces on it an oval luminous patch corresponding to the section, by that plane of the astigmatic pencil. Somewhere along the pencil between the (horizontal) focal line at m_1 and the (vertical) focal line at m_2 the section of the pencil contracts; all the rays here—at the place marked *s* in Fig. 2—being concentrated within a round patch called the *circle of least confusion*, which is the nearest approach to a well-defined image of the point-source. When there is little astigmatism, and when the stop is a hole of circular form, this smallest cross-section of the oblique pencil is likewise *circular*. The circles of least confusion which correspond to various points of the object are in general also situated on a *curved surface* K_3, which likewise cuts the axis in the focal point E. The existence of these *curved* focal surfaces has long been known. They are discussed, for example, in Coddington's *Treatise on the Reflexion and Refraction of Light* (1829), p. 199, where the condition for flattening the surface K_3 is laid down mathematically.[1]

If one cannot abolish the radial astigmatism, it is at least some gain if one can shift the positions of all the circles of

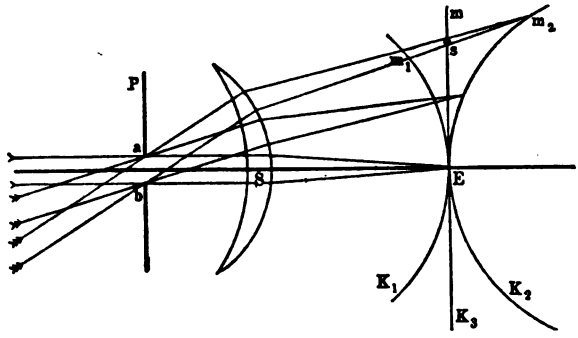

FIG. 3.—Use of Front Stop in Rectification of the Image.

least confusion so that they shall *all* lie in one plane; if, in other words, one could flatten the curved surface K_3, and

[1] See also R. H. Bow, in the remarkable papers contributed by him to the *British Journal of Photography* in the years 1861 and 1863.

bring it into coincidence with the plane E*m* passing through the focus E. This can, in fact, be accomplished *by the use of a Front stop* P (Fig. 3), placed at a proper distance before the lens.

As the figure shows without need of further explanations, the stop cuts out from each oblique pencil a partial pencil, which alone becomes operative, the other rays being intercepted. Moreover, while if the stop were close to the lens all these partial pencils would traverse one and the same part of the lens (namely its central part), when the stop is removed to *some little distance in front* the operative partial pencils will traverse different regions of the lens, those partial pencils which are most oblique traversing zones of the lens nearest its periphery, while those pencils that are less oblique will traverse the lens nearer its middle.

Experience shows that for any given meniscus lens there is a particular distance of the stop which will bring the circles of least confusion of all the oblique pencils almost exactly into the plane E*m*, which is the plane where the axial rays come to their focus. This is a very different matter from that which we have previously called *flattening of the image* (which *can* theoretically be accomplished optically by lens combinations without the use of a stop), so that we may fairly describe the effect here produced by the use of a front stop as an artificial rectification of the image. What is understood by curvature of the image, in the sense of von Seidel's five aberrations (see p. 10, *ante*), is strictly the curvature of an image possessing in other respects stigmatic accuracy. One can only talk of an actual *elimination* of this aberration if with the removal of the curvature, and the consequent attainment of flattening, there remains also attained the condition that the rays are reunited in stigmatic correspondence; and this is not so in the use of a single meniscus lens with a front stop to trim down the circles of least confusion into approximate compliance with fair definition in one plane. We shall return to this matter in considering achromatic double-objectives.

Here, however, we are dealing only with a *shifting* of the smallest cross-section of the oblique pencil between m_1 and m_2, a shifting accomplished by methods which, so far from annulling the astigmatic difference m_1, m_2, even increase it. And indeed

this artificial rectification of the curved image *is only possible when there is present a sufficiently considerable want of accuracy* in the convergence of the pencils of rays.[1] Only in such cases can the point of reunion of a partial pencil, cut from a full pencil by means of a stop, be changed by making a corresponding change in the position of the stop. In Fig. 4 this operation is exhibited. The full oblique pencil, which fills the aperture *uv* of the lens S, after emergence does not meet in one point, but (so far as those rays are concerned whose meridian is the plane of the paper) cut one another in such a way as to form a *caustic curve* QL′W. It will be noticed that this caustic curve is not symmetrical with respect to the axis $L_\infty SL'$ of the oblique pencil. In fact, this is the

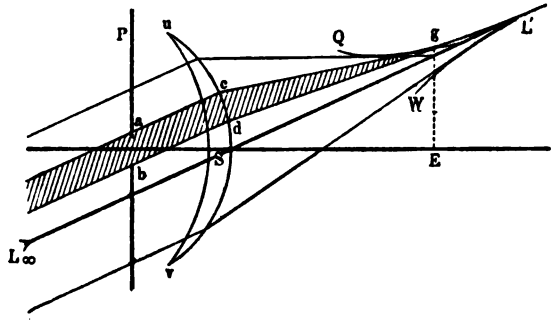

FIG. 4.—Operation of Stop in selecting Partial Pencils and so shifting Position of Image.

cause of the defect called *Coma* (see p. 8). Only those rays intersect each other which lie in neighbouring positions in the pencil; and they intersect more or less in a point or in a small focal line. By applying the stop P with the small aperture *ab*, all the rays of the entire oblique pencil *uv* are cut off, except only those of the partial pencil *cd*, which is cross-hatched[2] in the Figure 4. Consequently, in place of the caustic curve QL′W there now appears at *g* a fairly-defined image of the point-object which is situated far away along L_∞. The nearer the stop P is pushed in toward the lens S, the

[1] Nevertheless the knowledge of this simple expedient leads to important conclusions with respect to the symmetrical double-objectives to be presently described.

[2] The reader is advised that Fig. 4 is purely diagrammatic, and exaggerates the defect. There is no attempt to represent the accurate refraction of the individual rays.

nearer does the region *cd*, where the incident pencil meets the lens, shift toward the middle region of the lens, and the point-image *g* toward L′. As soon as the stop comes into contact with the lens, all the operative partial pencils traverse the middle of the lens, and the tip L′ of the caustic curves becomes the position of the point-image for all rays in the vertical meridian. When, however, the distance of the stop is sufficiently great, the various partial pencils pass *through different zones* of the lens, according to their various obliquities, and of each caustic there comes into operation only one spot *g*. The greater the obliquity of the pencil *uv*, to which the partial pencil *ab* belongs, the nearer does the operating zone lie to the periphery of the lens, and the further from L′ is the effective spot *g* of the caustic.

After the same fashion one may also produce a similar series of changes in the position of the focus of a pencil by pushing the stop P right up to the lens, and displacing it in a vertical direction along its surface. But only a displacement of the stop *along the axis* can *simultaneously* cut out from the various pencils appropriate partial pencils [1] that lie in their several meridians. Here, then, we find the rationale why in the use of landscape lenses, and other single-component systems used in photography, the stop is *always* placed *in front*.

Hand in hand, however, with the increase of the distance of the stop, and with the rectification of the image thereby effected, there enter in other detrimental conditions. In the first place may be mentioned the rather insignificant fault that both the size of the field and that of the evenly-illuminated part of the image are diminished. A far more grievous fault is, however, the distortion of the picture.

[1] In many cases the central ray of a pencil may be taken as representative of the rest of the rays of that pencil, and may be regarded as its axis, even though it does not pass through the optical centre of the lens, and though it is itself refracted in traversing the lens. Such rays are sometimes called *chief rays*, because of their representative character.

LIBRARY OF THE UNIVERSITY OF CALIFORNIA

CHAPTER VI

THE CAUSE OF DISTORTION—CONDITIONS NECESSARY FOR DISTORTIONLESS PICTURES

SUPPOSE that the first four of von Seidel's conditions (S_1 to S_4, see p. 8) have been complied with: then the lens-system will project a stigmatically sharp image, of an object-plane[1] perpendicular to the axis, upon a second plane—the image-plane—which is also perpendicular to the axis. This image will be similar to the object and without distortion, provided von Seidel's fifth condition ($S_5 = 0$) is also fulfilled. An image which thus is free from distortion is sometimes called "angle-true," or "orthoscopic," or "true in perspective"; and a lens which will perform this, giving, for the full field, images of straight lines *as* straight lines, not curved nor sloping at incorrect angles, is spoken of as a "rectilinear" lens.

This condition of freedom from distortion of the picture has reference of necessity to the path followed by the *chief rays* of each pencil, and may be deduced from simple considerations.

First, it is clear that, particularly where, as in the pin-hole camera (Fig. 1), the chief rays proceed *unbroken* from object to image, point to point, orthoscopic similarity is realised of itself. The centre of the aperture, where the chief rays intersect one another, is then the centre of projection, and the chief rays of all the pencils, when considered geometrically, are straight lines that intersect two planes that are parallel to one another, therefore giving *geometrically similar* figures for image and object. Since in the pin-hole camera any flat object produces an image which, whatever its defect of defini-

[1] Meaning of an object all points of which are situated on one plane—as, for example, a picture or a wall—or, in other words, a flat object.

tion, is likewise flat, it is evident that the pin-hole camera must project an image which is orthoscopically similar right up to the margin of the field of view, because of the *rectilinear* course of the chief rays.

Entirely similar is the course of the chief rays in the case of a *sphere-lens* (Fig. 5) having a central stop *ab* with a small aperture. Here also the chief rays proceed *in straight lines* from points on the object to the conjugate points on the image. Here also, if the image is to be similar to the object, parallel planes, perpendicular to the axis, must be conjugated together—that is to say, must correspond point-for point. But as Fig. 5 shows, the sphere-lens produces, from a *flat* object, an image which, though sharp (at least with a

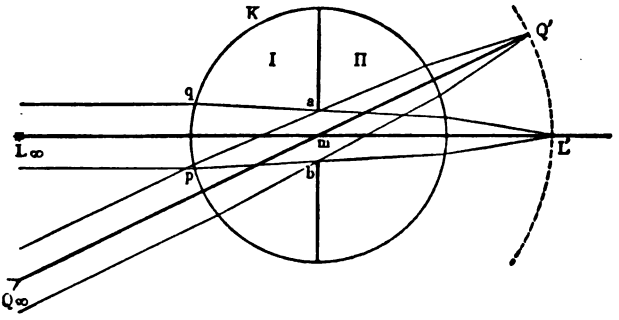

FIG. 5.—Production of Curved Image by a Sphere-lens having a Central Stop.

relatively small stop), is *curved*. Assuredly the chief rays will project on a flat photographic plate an image similar to the object; but this image will be sharp only in the middle, the definition rapidly falling off from the middle towards the margins. The image Q'L' received upon a suitably curved plate will be sharp up to the margin; but, on the other hand, it is not similar to the distant flat object, but is much distorted.

If, as in most objectives, the chief rays suffer a *deviation* in passing through the system, then their course must conform to certain ascertainable laws if orthoscopic conditions are still to be fulfilled.

We have mentioned how a simple lens furnished with a *front stop* produces in the image a distortion which is the greater the further the stop is removed from the lens. Let us next investigate, in this simple case, what the course of the

chief rays must be, in order that an orthoscopically similar picture shall result. For this the assumption will be made that the system S is such that it forms a sharp image of a flat object that is perpendicular to the axis, and that the image is itself also flat, and in a plane perpendicular to the axis. If, as shown in Fig. 6, the stop P lies *in front of* the lens-system, then the chief rays, while still in the region in front of the lens, all intersect the axis in one and the same point, namely the point *m* at the centre of the aperture of the stop. They then go on to the lens, and are refracted according to the laws of geometrical optics. The course of these refracted chief rays varies according to the correction of the lens-system. If the

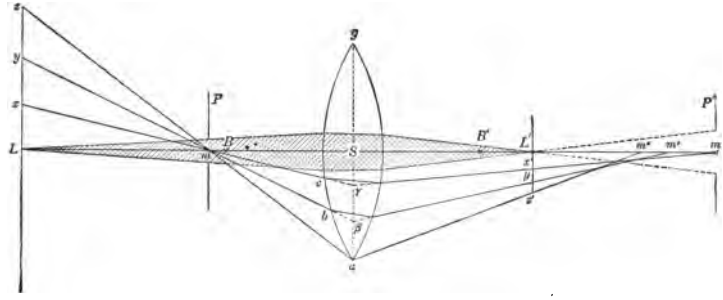

FIG. 6.—Paths of Chief Rays before and after Refraction. Spherical Aberration of Image of Front Stop.

system be a simple converging lens, then the marginal rays after refraction cut the axis nearer to the lens than do the axial rays. Let m', m'', m''' be the points of intersection of the axis for the chief rays *ma*, *mb*, *mc* in question. Furthermore, let a (which is identical with a), β, γ, etc., be the points of mutual intersection where the chief rays before and after refraction meet if produced: these points may be called the *chief points*[1] *of the oblique pencils*, or of the chief rays.

[1] In rendering into English by "chief rays" and "chief points" the words *Hauptstrahlen* and *Hauptpunkte* of the original German, the use of the terms "principal rays" and "principal points" has been purposely avoided. As the term "principal points" is already recognised in optics to denote the two points *on the axis* which in Gauss's treatment of thick lenses constitute the pair of optical centres of the lens, there would be some confusion if the same term were here used for points not on the axis, and which are not the optical centres. The term "chief ray" (as explained in the footnote to p. 28) is used for the central ray of any oblique pencil. It will be noted that the points α, β, γ, at

Now it was assumed that the lens-system S is such as to give stigmatically a *flat* image (at L′) of a flat object situated at L. Accordingly the points x, y, z of an object situated in a plane perpendicular to the axis have their respective images x', y', z' at the places where the corresponding chief rays, after refraction through the lens, intersect the conjugate plane, which is likewise perpendicular to the axis. Orthoscopy, *i.e.* the formation of geometrically undistorted images, requires therefore that all pairs (*i.e.* rays before refraction and after refraction) of chief rays should trace *similar* figures on the conjugate pairs of planes. But this is the case only if (1) the chief rays which intersect one another in the "object-region" (*i.e.* in front of the lens) *also intersect one another at a single point in the "image region"* (*i.e.* behind the lens), and if (2) *the "chief points" α, β, γ,* etc., *lie in a plane that is perpendicular to the axis.* In such a case the chief rays would belong to pencils of rays that are orthoscopically similar, and they would always trace out geometrically similar figures upon *any* plane that might be drawn across the axis perpendicular to this axis. Provided that *both* the conditions stated are fulfilled at once, then the lens-system will be orthoscopic for all distances of the object.

If then the chief points α, β, γ, etc., all lie upon a plane perpendicular to the axis, there remains to be satisfied as the one necessary and sufficient condition for distortionless performance the requirement that all the chief rays *shall after refraction be reunited to one point.* But this is equivalent to saying that the lens shall reunite in one single aberrationless point all the rays going out from m: or, in other words, that the lens shall be [1] *free from spherical aberration with respect to*

present being dealt with, have certain properties in common with the so-called "principal points" of Gauss. In fact, on the assumption that the lens is *thin*, so that its two "principal planes" are coincident, these points α, β, γ, here called "chief points," are points on the "principal plane."

[1] In the *Aplanatic* type of lens, and in *Double-objectives* of symmetrical construction with the stop in the middle, the position of the "chief points" is of no particular importance. For since, in consequence of the symmetrical path of the rays, the conjugate chief rays run parallel to one another, the condition of accurate reuniting (real or virtual) of the incident and emergent chief rays is satisfied, as we shall show later. In other words, *the spherical correction of the system relatively to the "entrance-pupil" and the "exit-pupil" suffices for the production of complete orthoscopy.*

the point m, *which is the centre of the stop* P, *and with respect also to its conjugate image* m′.

If in any lens-system the "spherical aberration of the chief rays" has been eliminated, then the questions whether the system produces distortion, and what is the nature of that distortion, are determined by the positions of the "chief points." Now this further condition, that all "chief points" shall lie upon a plane perpendicular to the axis, is identical with the fulfilling of the principle known as the *tangent-condition;* which, expressed in words, is that the ratio of the tangents of the angles between the ray and the axis *shall be constant for all* conjugate rays.[1] But in any case the requirement that the entire object should be delineated without distortion in the image requires, *in addition* to the fulfilment of the condition of equality of ratio of the tangents, that there should be *spherical correction for the position of the stop and its image*, and, indeed, for the aperture-ratio (ag/mS) actually used for the chief rays.

In the case of a thin bi-convex lens, in which the "chief points" lie close to its mid-plane *ag*, the course followed by the chief rays suffices to afford information about the nature of the distortion, its amount, and its alteration, when any alteration is made in the position of the object of the stop, or of the lens. Firstly, it is known that a simple positive (*i.e.* convex) lens refracts the marginal rays *more strongly* than the axial rays. If, therefore, as in Fig. 6, real images are formed of the object and of the front stop, it follows immediately from their mutual positions that spaces of equal size on the object ($Lx = xy = yz$, etc.) will suffer (see $L'x' > x'y' > y'z'$) a *minification* toward the margin of the field. If a network of straight lines at right angles, like Fig. 7, *a*, is used as object, there will be produced a distorted image, like Fig. 7, *b*. This kind of distortion we will call a *negative* one. It is sometimes called a "barrel-shaped" distortion.

According as the stop is situated at a distance BS (Fig. 6) within the focal length, or at a distance LB between the

[1] Compare Czapski's *Theory of Optical Instruments*, pp. 110-13. This *tangent-condition* appears to have been first formulated by Lagrange. See also Helmholtz's *Physiologische Optik* (edition of 1896), p. 70; or Pendlebury's *Lenses and Systems of Lenses* (1884), p. 26; or Heath's *Treatise on Geometrical Optics* (second edition, 1895), p. 57.

focal plane and the object, there is produced a *real* or a *virtual* image of it. Whichever of the two it be, the distortion is, however, *negative* so long as the stop is situated *in front* of the lens-system. In the particular case where the stop coincides with the front focus at B, its image is at an infinite distance, the chief rays must therefore go on parallel to the axis,[1] and orthoscopy will be realised. We now can clearly see that the

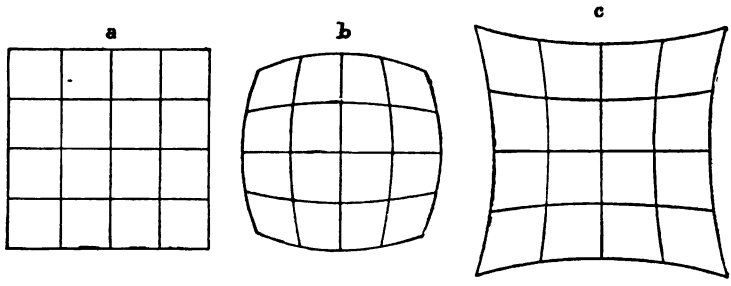

FIG. 7.—*a*, Reticulated Object; *b*, Barrel-shaped (negative) Distortion; *c*, Pincushion-shaped (positive) Distortion.

condition of orthoscopy, so far as it relates to the accurate reuniting of the chief rays, is in contradiction to the requirement of great intensity of illumination; for, in general, a system which has been made aberrationless for the focus and for its infinitely distant image will *not* also accurately reunite, stigmatically, the pencils of rays originating at points *on the object*, at least not with a wide aperture to the system.[2]

[1] Abbe calls such a system "telecentric on the side of the image." It is specially used for micrometric measurements, since the size of the image is independent of small adjustments. See Abbe in the *Sitzungsberichte der Jenaer Gesellschaft für Medizin und Naturwissenschaften*, 1878; see also Czapski's *Theory of Optical Instruments*, p. 165.

[2] In Czapski's *Theory of Optical Instruments*, p. 111, there is given the following rule for attaining freedom from distortion:—"The ratio of the trigonometrical tangents of the angles which the corresponding chief rays in image and object make with the axis, must be constant." This rule has been the subject of recent discussions. See Kaempfer, in Eder's *Jahrbuch*, xi. 1897, p. 247; and M. von Rohr, in the *Zeitschrift für Instrumentenkunde*, September 1897, p. 271. The latter writer has shown that the constancy of the tangent-ratio is the necessary and sufficient condition for freedom from distortion only when the system is itself such as to yield on both sides a distortionless image of the stop. According to a statement of Abbe, the degree of distortion, even in the case of symmetrical objectives, depends in general on the distance of the object; freedom from distortion being only attained when the magnification is equal to unity.

Bi-convex lenses can be spherically corrected either for the position of the stop, or for the position of the object, by choosing the curvatures of the two faces not equal, but such as will make the amount of refractive work performed by the two surfaces respectively equal to one another. If the size of the stop is properly proportioned for reuniting the refracted pencils, then the positions, on the one hand of the object, on the other hand of the stop, which will lead to good definition, are determinate.

As one may find out by shifting the stop along the axis, any movement of the stop nearer toward the lens increases the size of the visible field; but, for *equal* angular width of field, the aperture-ratio (ag/mS) used for the outermost chief rays is diminished, and is diminished, indeed, in a greater proportion than the distance of the stop. Along with this there is attained a more accurate convergence of the *effective* chief rays, in consequence of which again the distortion will be less. But even when the stop touches the lens, there must still, at least with a lens of appreciable thickness, be some distortion present.[1]

If the stop is introduced on the far side of the system, between lens and image, so that it becomes a *hind stop*, then the distortion changes its sign and becomes *positive*. The magnification increases toward the margin of the field, and the crossed network of lines (Fig. 7, *a*) assumes in the image the form shown in Fig. 7, *c*, which is known as a *pincushion-shaped* distortion.

If in this case the system is to become orthoscopic, the operative chief rays must either all aim for the point that is the image of the centre of the stop, or else they must all appear to come from it, according as whether the image of the stop lies behind the object or in front of it. It all comes in general to the same purport, whether the system be furnished with a front stop or a hind stop: in order that a system may be orthoscopic and form an undistorted image of any *flat* object, it must primarily be free from spherical aberration with respect to the points where the stop and its image are respec-

[1] If the "chief" points do not lie on a plane perpendicular to the axis, one can learn only by working through the calculations how far the spherical aberration of the "chief" rays compensates for the former defect.

tively situated; and secondarily, the chief points for all the effective chief rays must lie on a plane perpendicular to the axis; or, what amounts to the same, the tangent-condition must be fulfilled.

Let us here draw a distinction between *simple* and *compound* systems of lenses. In the former the stop lies outside the system. Compound lens-systems consist mostly of two component systems, I and II in Fig. 8, *between* which

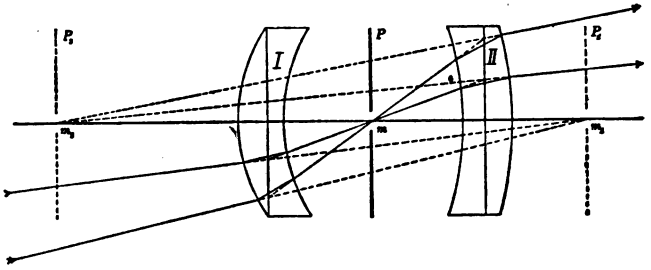

FIG. 8.—Double-objective consisting of Two Components with Stop between them.

the stop is placed. According to whether the compound systems are made up of two like or two unlike components, they are denominated "symmetrical" or "unsymmetrical." Those which are symmetrical with respect to the stop in the middle, such as the *Aplanats*, we will call "Double-objectives."

Let us consider any compound lens-system. We shall assume that, whatever its species, it is such as to give, from a *flat* object perpendicular to the axis, a corresponding *flat* image also perpendicular to the axis; and then, proceeding in a manner analogous to that followed for simple systems treated above, we will investigate the conditions which it must fulfil in order that the picture shall be *angle-true* and *distortionless*. First let us consider the course of the chief rays for a given position of the actual stop P.

To this end we must find by graphic construction, according to Abbe's method, the virtual stops, or "pupils," which limit the field in the object-region and the image-region respectively. Wherever the actual stop is inserted in the optical system, it can always be shown that the operative pencils of rays in the object-region are limited, as it were, by a

stop, the image of which, relatively to the system itself, limits the pencils of rays in the image-region. In other words, regarded from the front, through the front component of the lens, the actual stop acts on the incident rays as a virtual stop of a different size and position; and when regarded from behind, through the hinder component, the actual stop acts as toward the emergent rays as a virtual stop of again a different size and position. Abbe gives the name of "entrance-pupil" to the virtual aperture in the front aspect, and that of "exit-pupil" to the virtual aperture in the hinder aspect. These two pupils[1] are conjugate one to the other, each being the image of the other so far as the whole lens-system is concerned. If, as in the compound objective under consideration, the actual stop P lies *between* two components I and II, then necessarily the (virtual) image P_1, which component I gives of the stop P, acts as *entrance-pupil*, while as *exit-pupil* there is the (virtual) image P_2, which component II gives of the same. The apertures P_1 and P_2, which are conjugate with respect to the whole system I + II, are accordingly the defining limits of angular width for the admission of rays. They fully replace, in their action on the light, the actual stop P. If in any instance P_1 and P_2 were "real" images of P, we might remove the latter and replace both P_1 and P_2 by bodily stops. But as P is in almost every case nearer to the component lens than the principal focus of the latter, the images P_1 and P_2 are virtual.

For the sake of greater intelligibility, let us here consider the stop as being itself very small. Then the pencils are reduced almost to their chief rays, and these all intersect one another at *one* point, the mid-point *m* of the stop P.

If the compound system I + II is to be orthoscopic and to produce a similar image of any plane object, then in this case also the condition is that the pencils of chief rays in the object-space and in the image-space respectively must trace similar figures where they are intercepted by the pairs of conjugate planes perpendicular to the axis. This occurs in any given compound objective only under the conditions that (1) the chief rays both before and after refraction pass through *one*

[1] For an excellent and simple account of Abbe's theory of the entrance- and exit-pupils of an optical system, see Dallmeyer's *Telephotography*, pp. 94-101.

common point on the axis, or when sufficiently prolonged meet in *one single point;* and that (2), on the other hand, the "chief points" of the oblique pencils, relatively both to the front component I and the hinder component II, lie upon a plane perpendicular to the axis (compare Fig. 8). If the latter condition is fulfilled of itself, then the sole requirement for the production of an orthoscopically similar image is—*The combination must be free from spherical aberration with respect to the entrance- and exit-pupils.*

The Double-objectives are distinguished from all the unsymmetrical compound systems by the circumstance that in them the path of the chief rays through the middle stop is absolutely *symmetrical.*

Howsoever oblique may be the course of the chief incident rays *before* the front component, those only being operative which actually cross one another at the aperture of the mid-stop, the emergent chief rays which are conjugate to them will emerge from the hinder component *parallel* to their several directions before incidence. This relation exists provided the incident chief rays all aim for one and the same point (namely, the mid-point m_1 of the entrance-pupil P_1, which is conjugate, with respect to the front component, to the real mid-point m); or, in other words, provided the front component is free from spherical aberration with respect to the position of the stop and to that of its image. By reason of the symmetry, all the chief rays emerging from the hinder component will also appear to come from one single point, viz. from the image of m with respect to that component. But if the incident chief rays intersect one another in a single point, the emergent ones also in a single point, and if the conjugate chief rays run parallel to one another, then the latter will trace out similar figures when they cross all planes that are perpendicular to the axis. However the chief points may be situated, the double-objective always gives angle-true and rectilinear pictures, provided it is corrected spherically with respect to the places of the entrance- and exit-pupils. In the double-objective the removal of the spherical aberration of the system, with respect to the chief rays that are operative for a given position of the stop, is the sole condition for orthoscopy—that is to say, for giving pictures that are free from distortion. In other words, *the system must*

be spherically corrected with respect to the entrance- and exit-pupils.[1]

Without going now any further into the consequences which might be deduced from the known path of the rays in the simpler forms of double-objective, such as the *Periscope*, etc., by tracing their connection with the principle thus established, suffice it to say that as in the simple system so also in the compound system, the condition for attaining orthoscopy stands in direct contravention of the requirements for great intensity of light. In general it would be difficult, to say the least, to procure a lens-system which should be free from spherical aberration, not only with respect to its entrance- and exit-pupils, but also at the same time with respect to the relatively distant object and its image. At least it would be difficult for a lens having a large aperture-ratio.[2]

[1] Early in the year 1896, when Professor Lummer arrived at the establishment of this condition for the orthoscopic formation of the image, he asked his friend, Dr. P. Rudolph of Jena, to be so good as to calculate out how far the objectives in commerce *which were commonly described as orthoscopic* were spherically corrected with respect to the entrance- and exit-pupils. Some calculations worked out with this purpose showed that most compound lens-systems do not comply with this condition. Professor Lummer therefore followed out no further the consequences of this condition, and only approached the matter again when, shortly afterwards, Dr. Rudolph wrote that the so-called "notoriously distortion-free" objectives, both symmetrical and unsymmetrical, were far from being free from distortion, at least not free for all different distances of objects. Professor Lummer takes the opportunity here of expressing his warmest thanks to Dr. Rudolph for the advice and information which he has many a time imparted to him.

[2] Von Seidel discusses the question as to when a system is spherically corrected simultaneously for various distances of the object—that is to say, when it satisfies the so-called Herschel's condition. He finds that the latter contradicts Frauenhofer's condition. Only in certain quite special cases can both conditions be fulfilled at once. The telescope, used as a whole, is an apparatus so designed that both the conditions named will be attained if one of them is realised. See *Astronomische Nachrichten*, xliii. p. 326, 1856.

CHAPTER VII

SYSTEMS CORRECTED FOR COLOUR AND SPHERICITY, CONSISTING OF TWO ASSOCIATED LENSES—OLD ACHROMATS

AN important advance in the domain of practical optics was made in the year 1752 by Dollond, when he succeeded, by combining two lenses of different kinds of glass, in *eliminating the chromatic dispersion* without destroying the power of the lens to refract the rays to a focus. So far as concerns the first of the five aberrations in von Seidel's list, namely the failure of the lens to give a sharp image in the middle of the field, the removal of which is the first term in the correction for spherical aberration, and so far as concerns the first term [1] in the corrections for chromatic dispersion, namely the correction for the focussing of different colours at different distances from the lens, Dollond's principle affords a satisfactory solution. For by suitably combining two lenses of different materials a *complete elimination* of these two defects can be attained.

The popular method of describing Dollond's invention is to say that he obtained an achromatic lens by associating together a lens of crown glass and another of flint glass, one being a positive, the other a negative lens, and so made one correct the chromatic aberration of the other. This mode of statement is

[1] In other words, this means that the middle part of the objective can be made to bring to accurate convergence at *one* point two pencils of rays of different colours. In order that the higher members also in the series of chromatic aberrations, or, as Abbe calls them, the "chromatic differences of the spherical aberration," should be eliminated, it is necessary that *all* zones of the objective, and not its central region only, should be corrected, so as to bring the two colours from these parts of the lens also to focus in the same point. With *two* lenses (flint and crown) only *two* colours can be accurately brought to coincidence; the coincidence for the remainder of the colours is only approximate, because of the *irrationality* of dispersion.

not only loose, but is partly misleading. No lens made of two kinds of glass only can be achromatic for all different colours from different parts of the spectrum. It can be designed to bring together red and violet rays, but in that case will not accurately focus yellow, green, or blue to the same point. Or it can be designed to bring orange and blue together, but will fail in accuracy with respect to red, yellow, green, and violet. There always remains a residual colour error uncorrected, this being a secondary chromatic aberration, or, as it is usually termed, a "secondary spectrum" or a "residual dispersion." Again, the so-called achromatic lens may bring together the two colours to one principal focus, and yet not produce images of the same size for the two colours, because the true focal length (on which the magnification depends) is the length from the principal focus back to the optical centre (or "principal point" of Gauss), and the position of the principal point may not be the same for the two colours. Again, the so-called achromatic lens, though it may bring axial pencils of two colours to meet accurately at one focus, will not be even in this limited sense achromatic either for wide pencils parallel to the axis, or for oblique pencils. In fact, just as the errors due to sphericity were shown by von Seidel to be numerous, so the errors due to chromatic dispersion are also numerous. The ordinary so-called achromatic lens of Dollond can be made to correct the first term of the series of spherical aberrations and the first term of the series of chromatic aberrations; but by putting together two lenses, one flint, one crown, not more than these two first terms can be corrected, and corrected only for two colours of the spectrum.

These two-lens combinations corrected in this sense achromatically and spherically we shall henceforth call *achromats*. The chromatic aberration is removed by selecting as *materials* two glasses having for equal amounts of dispersion unequal amounts of refraction, while the removal of the spherical aberration depends on selecting the appropriate *form* for the lens. The solution of the problem how to make an *achromat* depends on the application of the *principle of compensation*, which we shall many times over come to recognise as the main means for producing the best images through compound lens-systems. If one chooses two lenses of proper

form, made of appropriate materials, one of which makes a parallel beam convergent, and the other such as to make a parallel beam divergent, by suitable choice the positive chromatic and spherical aberrations of the first lens can be compensated by the negative chromatic and spherical aberrations of the second lens, *but without entirely removing the convergence of the pencil*, as would be the case if both lenses were made out of the same kind of glass. In this way, therefore, one obtains an *achromat* in which both the spherical and the chromatic aberrations are annulled, but having a definite *focal length*.

For the compensation of the spherical and the chromatic aberrations with the provision of a prescribed focal length—that is to say, to satisfy *three* prescribed conditions—there must be *three* variable elements at our disposal. These we have in the circumstance that in an achromat made of two lenses, one flint, one crown, there are four curvatures which we can choose at any values we please. To comply with the three conditions mentioned above we can vary three of these radii. But since with four available curvatures we might satisfy four conditions, it is usually preferred so to shape the curvatures of the lenses that the two inner faces shall have equal radii of curvature (one convex, the other concave), in order that the two lenses may be *cemented* together. The thickness of the glasses is here left at any convenient amount; but it must be relatively small.[1]

For the compensation of the spherical and chromatic aberrations of the first order, and the production of a definite focal length, the only requirement, therefore, is two thin lenses cemented together.

Such an achromat accordingly projects a *colourless* point as the image of a white point serving as object; or, more accurately expressed, it projects a small colourless *diffraction-disc* of such a magnitude as corresponds to the aperture-ratio employed.

We will assume with Petzval that the achromat may be, as in Daguerre's time, when used with the aperture $f/16$, so

[1] In the case of great thicknesses of lenses, it is possible even with two lenses of the *same kind* of glass to produce achromatism either of the focal points or of the "principal" points. See F. Kessler, *Schlömilch's Zeitschrift*, xix. p. 1, 1884.

well corrected spherically that the image may bear a threefold enlargement. Such a cemented achromat is inferior to a Petzval's portrait-objective in defining power threefold only, while it is its inferior in intensity of light nineteenfold. Yet it surpasses the single glass convex lens by about three times in definition and about four times in intensity. To this superiority there must be added the further advantage that it is free from the so-called "chemical focus."

If instead of the cemented lenses there are used two separated lenses, as these four different radii of curvature at the four surfaces, there arises the possibility of choosing the curves so as to satisfy a *fourth* condition in addition to the three enumerated above. As such a fourth condition the important one to adopt,[1] at least for lenses to embrace a wide field of view, is Frauenhofer's condition, which is fulfilled in the objective of his celebrated heliometer. Steinheil pushed the investigation further, endeavouring in his telescope objectives to comply with the second chromatic condition, which requires the magnification (and therefore the true focal length, or length measured back from the principal focus to the "principal point") to be of equal value[2] for *two* colours.

In general, when using ordinary kinds of flint and crown glass, such as were available in Frauenhofer's time, solution of the equations results in two different typical forms[3] of cemented achromats; that is to say, there are two general forms of cemented achromat for which the spherical and the chromatic aberration is annulled, and only these two forms if the old kinds of glass are used. The first typical form, Fig. 9, is that commonly used for telescope objectives, since

[1] As already mentioned, Frauenhofer's condition, which is identical with Seidel's condition that $S_2=0$, is identical with the sine-relation for relatively small angles of aperture of the emergent pencils. In the case of telescope objectives this sine-condition assumes a simple form. It is satisfied if the "chief points" for the various rays parallel to the axis lie upon a *circle* having its centre at the principal focus and the true focal length as its radius. (Compare Steinheil and Voit's *Handbook of Practical Optics*, Leipzig, 1891, p. 57.) See also Appendix III., p. 122.

[2] Compare A. Steinheil's memoir "On the Orientation of Objectives consisting of Two Lenses, and on their Aberrations," *Astronomische Nachrichten*, cix. p. 216, 1884.

[3] On this point the reader should consult an admirable paper by Mr. Conrad Beck "On the Construction of Photographic Lenses," in the *Journal of the Society of Arts*, 1st February 1889.

even with a relatively large aperture-ratio it gives sharp images; it has the convex side (of the crown glass) turned outwards toward the light. If it is reversed, so that the concave side is turned outwards toward the light, it gives a definition that is less sharp at the centre of the field, but gives more *widely extended* images of moderate sharpness.

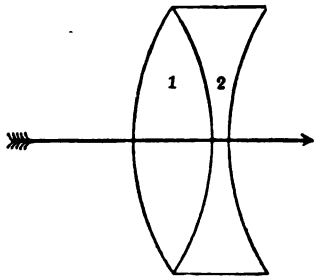

FIG. 9.

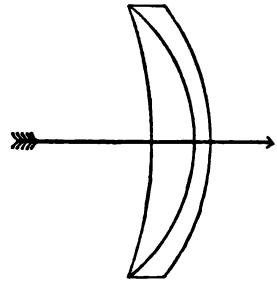

FIG. 10.

The two Typical Forms of Old Achromats.

Daguerre took his first photographs in the year 1839 by the help of such a meniscus lens.[1] The second typical form, Fig. 10, which is a *meniscus* shape, consisting of a positive meniscus of crown combined with a negative meniscus of flint, if used as an objective with the concave side outwards, has sharp definition over a larger region of the field.

As in the case of the simple glass convex lens, achromats are used in photography with a front stop, in order to shift into the focal plane the circles of least confusion formed by the astigmatic oblique pencils—that is to say, in order artificially to straighten the image. Recently some advantage has been found to accrue in using as landscape lenses, instead of these simple achromats, so-called anastigmatic objectives, consisting of three or of four lenses cemented together; and of these we shall speak in detail later. For the purpose of understanding aright these anastigmatic multi-lens objectives with flat field, we must examine more closely into the achromat, and particularly with respect to the kinds of glass which are used in its construction.

[1] So, at least, it is sometimes said. The form Fig. 10 was, however, only invented in 1854, by the late T. Grubb. The meniscus used by Daguerre more nearly resembled Fig. 9, the flint being a bi-concave lens, cemented to a bi-convex crown, the flint being the outward lens as used.

Two epochs are to be distinguished with respect to the modern use of glass in the construction of fine lenses—the epoch of Frauenhofer and the epoch of Abbe. Before Abbe and Schott, working in Jena, had completed their epoch-making researches for the production of new kinds of optical glass, there existed as available for optical calculations only certain kinds of glass in which the amount of the dispersion went on increasing with the increase of the refractive index. The higher the refractive index of the glass, the greater was its dispersive power; not in strict proportion, indeed, otherwise achromatic combinations would have been impossible. But there was no known kind of glass which, with a higher refractive index, had a lesser dispersion. The flint, which had a greater dispersion than the crown, always had also a higher refractive index. One has only to look through the lists of the optical glasses used by Frauenhofer, or those manufactured by the great houses of Chance and of Feil, and compare their refractive and dispersive indices, to see that this was so. The admirably careful measurements made by Frauenhofer,[1] and those subsequently made by Steinheil,[2] by Baille,[3] and by Hopkinson[4] on the values of the refractive indices for different parts of the spectrum afford no exception. This property of all glasses known during the Frauenhofer period necessarily involves as a consequence that the converging lens (marked 1 in Fig 9) of the achromat is made out of a glass having both a lesser dispersion and a lower refractivity than those of the glass which is used for the diverging lens (marked 2 in Fig 9).

If we denote by f_1 the focal length of the lens 1, by f_2 that of the lens 2, and by F the resultant focal length of the achromat, then, as is well known, the relation between them is expressed as—

$$\frac{1}{F}=\frac{1}{f_1}+\frac{1}{f_2}.$$

Since the lens 2 is a diverging or concave lens, we must

[1] *Sitzungsberichte der königlichen bayerischen Akademie der Wissenschaften zu München*, vol. v., or Gilbert's *Annalen*, lvi. p. 292 (1817).

[2] Steinheil and Voit, *Handbuch der Angewandten Optik* (1891), pp. 12-33.

[3] *Annales du Bureau des Longitudes*, cxciii. p. 620.

[4] *Proceedings of the Royal Society*, xxvi. p. 290, June 1877.

take f_2 as being *negative*, and then the relation may be written

$$F = \frac{f_1 \times f_2}{f_2 - f_1}.$$

Now, in order to produce real images, the achromat is to be itself a *positive* lens, and F must be positive, and this obviously cannot be the case unless f_2 is greater than f_1. In order that any lens shall have a high power (and therefore a short focus), it must either have a great curvature, if its refractive index is moderate, or it must be made of glass of a high refractive index with a moderate curvature. A converging lens of short focal length, combined with a diverging lens of longer focal length, never gives, however, images which are sharp and free from colour defects, unless the first of its two components, in spite of its stronger curvatures or of its higher refractive index, produces spherical and chromatic aberrations only just as great as those of the second of the two components. If in order to procure compensation of the chromatic dispersion one must perforce employ one of the lenses with deeper curves than the other, it is clear that the very deepness of the curvature will, unless the right selection is found by calculation, cause trouble by producing too great a spherical aberration to be compensated by that of the lens with less steep curves. Now, since the size of the circle of chromatic dispersion (see p. 23) is inversely proportional to the focal length, it necessarily follows that the converging lens must be made out of a glass of lesser dispersion than that used in the diverging lens, and therefore—so long as these glasses only are procurable in which the dispersion increases with the refractivity—it must needs be made out of a glass with a lower refractive index.

Achromats made of two cemented lenses constructed of these older kinds of glass of the Frauenhofer period we will denote by the name *Old Achromats*, in contradistinction to the new types of achromat, which can only be constructed with the use of certain of the modern Jena glasses, and which may be called *New Achromats*.

CHAPTER VIII

NEW ACHROMATS

We will assume that a two-lens objective may be so corrected that it reunites the rays stigmatically—both for points on the axis and for others aside of it. In such a case the first three of von Seidel's aberrations have been eliminated (or in symbols, $S_1 = 0$, $S_2 = 0$, $S_3 = 0$); and while a point-object gives a point-image to any object, there will correspond an accurately defined, though in general *curved* and *distorted* image. If no rays are present except such as comply with these conditions of von Seidel, then one would observe the image of a flat object as though it were a spherically curved surface whose vertex only touched the place where a flat image ought to be formed (compare p. 24).

The condition that this spherical surface should change into a plane is accordingly set down as von Seidel's fourth condition, namely $S_4 = 0$; or, if we introduce symbols for the quantities, the summation of which is signified in S_4, the condition is

$$\Sigma \frac{N}{r} = 0 ; \quad . \quad . \quad . \quad . \quad . \quad . \quad . \quad [1]$$

where r is the radius of curvature of any of the surfaces, N the difference of the reciprocals of the refractive indices of the two media bounded by that surface, and the summation to be taken for all the surfaces. Let us denote by the letter γ this reciprocal, and by μ a refractive index; also let us distinguish the media by giving them odd numbers, and the surfaces by giving them even numbers as suffixes.

Then von Seidel's condition for a two-lens combination with

four refracting surfaces and media would be, if written in full—

$$\frac{\gamma_1-\gamma_3}{r_0}+\frac{\gamma_3-\gamma_5}{r_2}+\frac{\gamma_5-\gamma_7}{r_4}+\frac{\gamma_7-\gamma_9}{r_6}=0.$$

Or, for two lenses respectively of indices μ_1 and μ_2 surrounded with and separated by air of refractive index = 1—

$$\frac{1-\frac{1}{\mu_1}}{r_0}+\frac{\frac{1}{\mu_1}-1}{r_2}+\frac{1-\frac{1}{\mu_2}}{r_4}+\frac{\frac{1}{\mu_2}-1}{r_6}=0;$$

or, as it may be written—

$$\left(\frac{\mu_1-1}{\mu_1}\right)\left(\frac{1}{r_0}-\frac{1}{r_2}\right)+\left(\frac{\mu_2-1}{\mu_2}\right)\left(\frac{1}{r_4}-\frac{1}{r_6}\right)=0. \quad . \quad . \quad [2]$$

As this formula shows, the condition for the flattening of the image succinctly depends upon the indices of refraction and upon the radii of curvature, but in nowise upon the distances of the various refracting surfaces, nor upon their order, nor yet upon the distance of the object. But there is reason to think that if any change were made in these matters that do not enter into present consideration, then the first three of von Seidel's conditions would in general no longer be fulfilled, and with them would vanish the formation of stigmatically sharp images. But if precision of focus no longer existed, it is useless to speak of prescribing the curvature of the surface in which the image is formed. Only under the provision that a stigmatic focussing up to the fifth order of precision is attained (*i.e.* that $S_1=S_2=S_3=0$), does the condition $S_4=0$ for the flattening of the image become valid and unambiguous.

Now the focal length f of a *thin* lens, whose surfaces have radii of curvature r_0 and r_2, is, as is well known,

$$\frac{1}{f}=(\mu-1)\left(\frac{1}{r_0}-\frac{1}{r_2}\right); \quad . \quad . \quad . \quad . \quad . \quad [3]$$

or in words, the reciprocal of the focal length is equal to the refractivity of the material of the lens (air being taken as unity) multiplied by the algebraic sum of the curvatures of its two faces.

Accordingly, if we treat the thickness of both the lenses of

our objective as negligibly small, the condition for flattening the image assumes the following simple form [1]:—

$$\frac{1}{\mu_1 f_1}+\frac{1}{\mu_2 f_2}=0\,; \quad \ldots\ldots\ldots \quad [4]$$

or

$$\mu_1 f_1 = -\mu_2 f_2 \quad \ldots\ldots\ldots \quad [4a]$$

This formula tells us, firstly, that f_1 and f_2 must have *opposite* signs, and secondly, that the lens of shorter focal length must be made out of glass of a *higher* refractive index. The value of f_2 in terms of f_1 may be stated at once as

$$f_2 = -\frac{\mu_1}{\mu_2} f_1 \quad \ldots\ldots\ldots \quad [5]$$

Now the value of the resultant focal length F of the compound objective, whose component lenses have focal lengths f_1 and f_2 respectively, is

$$F=\frac{f_1 \times f_2}{f_1+f_2};$$

and if in this we substitute for f_2 its value in terms of f_1, from equation [5], we obtain—

$$F=\frac{\mu_1 f_1}{\mu_1-\mu_2}, \quad \ldots\ldots\ldots \quad [6]$$

the significance of which relation we will discuss more narrowly.

First it is evident that if $\mu_1=\mu_2$ the focal length F at once becomes infinite. Two lenses, therefore, if of *the same* glass, give a *flat* image only when they act together [2] as a piece of parallel flat glass. Equation [4*a*] shows that if $\mu_1=\mu_2$ then also $f_1=-f_2$.

[1] In this form Petzval, in the year 1843, expressed the condition for flattening the image, without, however, giving the necessary general proof of its validity, the demonstration of which is due to von Seidel. Applied to a single lens formula [4] has no meaning. Considering the small attention paid, down to the most recent time, to von Seidel's theory of the formation of images, it cannot be wondered at that the correctness of Petzval's formula has been doubted, and its significance under-valued. The general principle of equation [4] was discovered by Airy, and is to be found in Coddington's *Treatise on the Reflexion and Refraction of Light* (1829), pp. 197-200.

[2] *Astronomische Nachrichten*, xliii. p. 323, 1856.

The discussion is of more interest for the cases where μ_1 is either greater or less than μ_2—that is to say, where the two lenses are made out of substances *of different refractivity*, as is the case in achromats.

In the objective depicted in Fig. 9, p. 64, f_1 is positive and f_2 negative. If such a lens is to be made achromatic by the employment of glasses of the Frauenhofer epoch, and also have a real focal length, then necessarily $f_2 > f_1$, and consequently also μ_2 must be greater than μ_1. The condition for obtaining a flat image, expressed in formula [4*a*], requires that if f_2 is going to be greater than f_1, then of necessity must μ_1 be greater than μ_2; for a reference to equation [6] shows us that if it is not greater, the resulting focal length F will be negative. Then it is clear that, *so long as the old kinds only of glass are available, one cannot possibly make, by combining together two lenses, an achromat that has a flat field;* for the condition of achromatism requires the more powerful of the two lenses to be made of crown and the less powerful of flint, while the condition for getting a flat field exactly contradicts this, and requires that the more powerful lens should be of flint and the less powerful of crown. If, on the other hand, one takes for the converging lens f_1 a glass of higher refractivity than that used for the diverging lens f_2, then one can only attain to achromatism if one can find glasses such that the glass of *higher* refractivity shall have a *less* dispersion than the glass of *lower* refractivity. In Frauenhofer's time no such glasses existed.

The flattening of the image required at the same time as achromatism in the two-lens objective involves then a further condition as to the sorts of glass to be used; for these must be such that *high* refractivity with a *lower* dispersion is paired off against a *lower* refractivity with a *high* dispersion. Such glasses were first put at the disposal of practical optics as a consequence of the foundation of the Glass-technical Laboratory of Schott and Co. at Jena. In the older kinds of glass of the Frauenhofer period, higher refractivity had always been associated with higher dispersion. For that reason, in the two-lens objectives made out of these older kinds of glass, the production of a flat field was impossible because it contravened the much more important condition of achromatism.

On the other hand, amongst the many kinds of glass

made in the Jena factory, while there are numbers closely resembling the old sorts, there are some that differ widely in their properties.

As there is much misunderstanding about the Jena glass, it is not inappropriate that something should be said here about it. Messrs. Schott and Co. have, during the dozen years of the operation of their factory, put out on the market some hundreds of kinds of glass, some of which have since been withdrawn, not being found of permanent value. Their present catalogue enumerates some seventy-five different kinds, ranging from a very light boro-silicate crown of index 1·4967 to a densest silicate flint of index 1·9626. A table containing a selected few from their current list is here appended.

TABLE OF A FEW OF THE JENA GLASSES

Factory Number.	Description.	Refractive Index μ_D.	Mean Dispersion $\mu_F - \mu_C$.	$\frac{\mu_D - 1}{\mu_F - \mu_C} = \nu$.
O 225	Light Phosphate Crown . . .	1·5159	0·00737	70
S 30	Dense Barium Phosphate Crown .	1·5760	0·00884	65·2
O 802	Boro-silicate Crown	1·4967	0·00765	64·9
O 40	Silicate Crown	1·5166	0·00849	60·9
O 138	Silicate Crown of high refractivity .	1·5285	0·00872	60·2
O 20	Silicate Crown of low refractivity .	1·5019	0·00842	59·6
O 1209	Densest Baryta Crown . . .	1·6112	0·01068	57·2
O 381	Crown of high dispersion . . .	1·5262	0·01026	51·3
O 726	Extra Light Flint	1·5398	0·01142	47·3
O 376	Ordinary Light Flint . . .	1·5660	0·01319	42·9
O 230	Silicate Flint of high refractivity .	1·6014	0·01415	42·5
O 118	Ordinary Silicate Flint . . .	1·6129	0·01660	36·9
O 41	Dense Silicate Flint	1·7174	0·02434	29·5
S 57	Densest Silicate Flint . . .	1·9626	0·04882	19·7

To these may be added for comparison a few other substances:—

	μ_D.	$\mu_F - \mu_C$.	ν.
Fluor-Spar	1·4338	0·00446	97·3
Canada Balsam	1·526	0·0227	41·5
Diamond	2·4173	0·0251	56·6
Aniline	1·5863	0·0248	23·6
Water	1·3337	0·006	55·6
Cinnamic Ether	1·5607	0·0508	11
Piperine	1·681	0·069	9·87
Silver Iodide	2·1816	0·123	9·6

It will be noted that in this list the glasses selected are arranged not in the order of their refractive indices (though as a matter of fact the glass at the head of the list has the lowest, and that at the bottom of the list the highest refractivity), nor are they arranged in the order of their dispersivity. The order chosen is that of the amounts of their mean refractivity for equal amounts of dispersion. This is best explained by a little circumlocution. The mean refractive index given for each particular glass is its index for the yellow light of the sodium-flame, *i.e.* for the D-line of the spectrum. It is denoted by the symbol μ_D; and as in lens-formulæ, such as [3] on p. 48, it is the *difference* between this index and that of air which constitutes the effective refractivity, we take $\mu_D - 1$ as the mean refractivity of the material. The dispersion is the difference between the refractive indices for two rays of different colour, and may be expressed either for the whole range of colours in the spectrum, or only for a part of that range. We might compare the dispersions of two kinds of glass, for example, over the region of the spectrum that lies between the A-line at the extreme end of the red, and the D-line in the yellow, and in that case $\mu_D - \mu_A$ would be the partial-dispersion over that region. It is, for purposes of comparison, useful to know these partial-dispersion values, since if we can find two kinds of glass, equally satisfactory in other respects, for which the respective partial-dispersions are nearly proportional to their dispersions as a whole, then such a pair of glasses will, if made up into an achromatic combination, have less residual colour-error—less "secondary spectrum"—than would be the case if their partial-dispersions were not so proportional. For ordinary optical purposes, and to bring the focus for red rays to coincide with the focus for blue rays, it is usual to measure the dispersion from the C-line that lies at the orange end of the red region to the F-line in the blue region.[1] That is to say,

[1] For purely actinic purposes it is necessary to design the lens so as to reunite all those rays that produce actinic effects, that is to say, from the blue-green of the spectrum to a point in the ultra-violet, disregarding the red, orange, and yellow parts entirely. For this purpose the mean refractivity might be taken as $\mu_a - 1$, and the dispersion as that from the F-line to the bright line in the violet afforded by an electric spark from a mercury electrode. But for *photographic* purposes it is desirable to reunite the "chemical" focus with the "visual" focus; so $\mu_n - 1$ is taken as the mean refractivity, while the dispersion is reckoned

we measure $\mu_F - \mu_C$, and use this value in our calculations as a measure of the mean dispersion of the material. But in lens designing it is still more important to know what proportion the mean refractivity bears to this mean dispersion. Accordingly, if we divide one by the other we obtain the quantity which, expressed in symbols, is

$$\frac{\mu_D - 1}{\mu_F - \mu_C},$$

for which it is more convenient to use the single symbol ν. We shall call it *the refractivity for equal mean dispersion*, or *the achromatic refractivity*. In the table the order of the various glasses is that of their values for ν. That at the top of the list—the lightest crown—has the greatest refractivity for a given amount of dispersion, while that at the bottom of the list—the densest flint—has the least refractivity for the given amount of dispersion. The importance of knowing these values lies in this: that if we know these values of ν we can *at once* state what the relative powers of two lenses must be that they may achromatise one another. Suppose, for example, we have to make an achromatic pair, using for the positive lens the silicate crown glass called "O 40," and for the negative lens the ordinary light flint "O 376," we see that the former has value $\nu = 60{\cdot}9$, and the latter $\nu = 42{\cdot}9$. These are two old-fashioned glasses of normal sorts. If we take the two lenses having their powers respectively proportional to these values, they will have equal dispersions that exactly compensate, and the resulting lens will have a power proportional to the simple difference—in this case 18·0. For example, to use the language of the ophthalmic opticians, if we wanted to make an achromatic combination having a power of 12 dioptries, we must take a "silicate crown" lens of $+12 \times \frac{60{\cdot}9}{18} = +40{\cdot}6$ dioptries, and combine it with an "ordinary light flint" lens of $-12 \times \frac{42{\cdot}9}{18} = -28{\cdot}6$ dioptries. Put these together. If

from the D-line to the G-line (or from the bright hydrogen line near it), instead of from C to F. In that case the refractivity for equal mean dispersion will be denoted for distinction as $\bar{\nu}$. It equals $\frac{\mu_D - 1}{\mu_G - \mu_D}$.

made each as plano-lenses, they will when cemented resemble Fig. 11, p. 56, and will have a net power of +12 dioptries. If thus taken without reference to the curvature of the cemented surface, it may indeed be achromatic, but will *not* be free from spherical aberration. It will not be a perfect "achromat." Neither will it have a flat field, since in this case we have taken a pair of glasses, of which the one with lower dispersion has also got the lower refractive index. This pair of materials could make only an "old achromat" at the best.[1]

Now consider the case of two glasses such as the following:—

	μ_D.	$\mu_F - \mu_C$.	ν.
Densest Baryta Crown . .	1·6112	0·01068	57·2
Soft Silicate Crown . .	1·5151	0·00910	56·6

This barium glass is one of a new species of glasses in which, by the admixture of barium salts, low dispersive powers have been obtained along with high refractivity. Out of the above two glasses an achromat with *flat* field might be constructed, since here

$$F = \frac{f_1 \mu_1}{\mu_1 - \mu_2} = 16 f_1;$$

whence it possesses a positive focal length. Turning again to the table of Jena glasses, suppose we selected as crown the brand called "S 30"—a barium phosphate crown—and as flint the brand "O 726"—the extra light flint; we should have

$$F = \frac{\mu_1 f_1}{\mu_1 - \mu_2} = 43{\cdot}5\, f_1.$$

This would give a very long-focus combination, but the field would be *flat* if the curves were chosen so as to correct for spherical aberration.

The higher, moreover, the refractive index μ_1 of the material selected for the positive lens (provided one does not go so far as to destroy the possibility of achromatising it), so much the

[1] See some examples of calculation of doublets and triplets by Mr. E. M. Nelson, in his Presidential Address to the Royal Microscopical Society, 1898, *Journ. R. M. Society*, pp. 156-169. The question of the modern design of triplets is treated by M. von Rohr in his recent work, *Theorie und Geschichte des Photographischen Objektivs*, pp. 363-387.

shorter may be the positive focal length of the combination, along with complete flatness of the image. For diamond (if one could use diamond as a material), which has a refractive index of $\mu_1 = 2{\cdot}4$, combined with ordinary flint, $\mu_2 = 1{\cdot}6$, would give a resulting focal length only about 3 times f_1.

Long ago Petzval, in the discussion about the possible flattening of the image, drew attention to the image-flattening property of the diamond, without, however, expressly removing the difficulties which would militate against the achromatising of a diamond positive lens by a negative lens of other material. On the other hand, von Seidel raised the objection that the requirements of achromatism contravene that of procuring a flat image.

Now that by means of the Jena glasses there are available the *anomalous pairs* of glasses which are needful for flattening the field, achromats have been produced in which the positive lens has a higher refractive index and a lesser dispersion than the negative lens.

As suggested above, we describe achromats made out of anomalous pairs of Jena glass as *New achromats*, to distinguish them from those made of the old kinds of glass. The cemented two-lens new achromat cannot, however, be spherically corrected so well as the old achromat. Its chief importance, on the contrary, appears, as we shall show, in its use *in combination with the old achromat.* In any case, however, we shall understand by the term *New achromat* an objective in which the disposable elements other than those needed for the attainment of the prescribed focal length are unreservedly devoted to the best possible annulment of chromatic and spherical aberrations. It will also be maintained that the distinction between the *new* and the *old* types consists, not in the order in which the glasses follow one another, but exclusively in the question whether the positive member consists of glass of higher index with lower dispersion than the negative lens, or of glass which has a lower index as well as a lower dispersion. In any and every case the correcting lens must have a higher dispersion than that of the lens which it is to correct.

The first two-lens objective that was made out of anomalous pairs of glass is that represented in Fig. 11, which is one

component of the Ross's *Concentric lens* designed by Dr. Schröder. This, taken by itself, has, in consequence of its shape, a considerable uncorrected spherical aberration, which, indeed, is not completely removed in the new achromats. Also in the *Group-antiplanet lens* of C. A. Steinheil, to be described later, one member is made out of anomalous pairs of glass; but this lens is *hyperchromatic*,[1] and expressly so in order to afford to the two other members of the *antiplanet* very strong aberrations of opposite kinds.

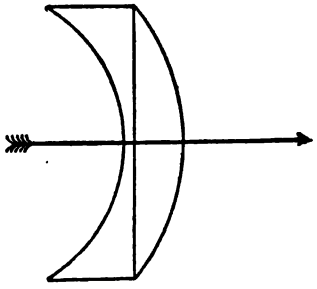

FIG. 11.—Achromat used in Concentric Lens.

[1] More chromatic, therefore, than the equivalent single glass lens.

CHAPTER IX

SEPARATION OF THE LENSES AS A MEANS OF PRODUCING ARTIFICIAL FLATTENING OF THE IMAGE

THE Seidel-Petzval formula for the radius of curvature at the vertex of the image is, as we have already mentioned, unambiguous only when the formation of the image is stigmatically accurate up to terms of the fifth power. In order to establish the correctness of this view, one need not apply it to a system which realises to the highest degree the theoretically perfect production of focus.[1]

The magnitudes *not included* in the Seidel-Petzval equation, for example, the distance of the object from the system, and the distance between the lenses, will have a large influence on the curvature of the image, since when they are altered the convergence of the rays is also changed.

As an example let us, following Schröder's lead, select the case in which two plano-convex lenses 1 and 2 (Fig. 12) are used as a system—first (*a*), very near together; and secondly (*b*), separated widely from each other. If the image is in the first case strongly curved, it will always become "flatter" *the further the two lenses are separated from each other.*

That the image is curved when the lenses are in contact is not to be wondered at, for then the two lenses act together as an individual lens of equivalent focal length, although the various faults are less than in the simple equivalent strongly-curved lens, because the work of refracting the rays is now shared between the two lenses. Here also to each point there corresponds a caustic curve, so that by suitable stopping off

[1] See Dr. Schröder's *Elements of Photographic Optics* (Berlin, 1891).

LIBRARY OF THE UNIVERSITY OF CALIFORNIA

the curved image may be artificially straightened, as explained in Chapter V.

Now this "stopping" may be effected by the *separation* of the lenses themselves (Fig. 12, *b*). Here the first lens acts similarly to a stop as regards the oblique pencils, so that only a part of them comes into action. Moreover, in consequence of this, each operative partial pencil passes through the two lenses in a reversed manner, inasmuch as it traverses the opposite sides of the two lenses. For example, the pencil which

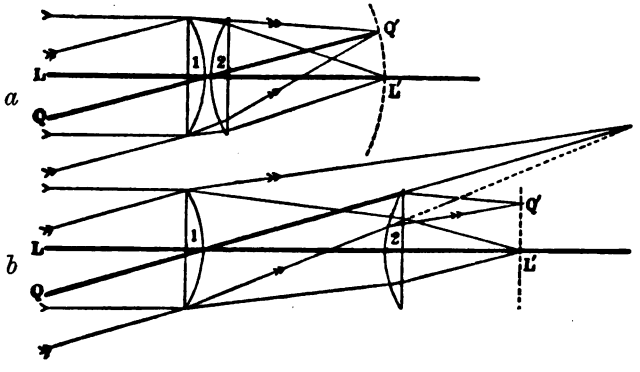

FIG. 12.

traverses the *lower* part of the first lens traverses the *upper* part of the second lens, and *vice versa*. The rectification of the image caused by separating the lenses is not to be confounded with the true formation of flat images, attained by the choice of suitable kinds of glass, as in the "new achromats." The latter process is a true *correction* compatible with the use of the full aperture, or full at least in comparison with an "old achromat" of equal power.

The artificial flattening of the image by the use of stops is attained *at the expense of intensity of the light*, especially of that of the oblique pencils; for it is brought about, not by any appropriate change in the ray-path of each pencil, but only by exercising a suitable selection among its many partial pencils.

We are now in a position to comprehend, in the case of the unsymmetrical double-objectives, the correction of aberrations by methods depending upon the same principle.

CHAPTER X

UNSYMMETRICAL OBJECTIVES CONSISTING OF TWO MEMBERS

The Petzval Portrait-Objective, by Voigtländer

THE portrait-objective calculated out by Petzval in 1840 is still to-day used in almost the same form as he originally gave to it, and as such has scarcely been surpassed. This circumstance shows very clearly that in the optical art, more than in all others, theory correctly applied leads to the desired goal.

At the time photography came into existence, when Draper of New York obtained, in 1840, the first portrait of a living person with an exposure of two to twenty minutes duration, it was the keen desire of all concerned to possess an objective which *transmitted more light*, such as would shorten the time of exposure. Petzval of Vienna and Chevalier of Paris sought, independently of one another, to attain this end, and in so doing they designed lens combinations of several associated members.

Already in the year 1841 Voigtländer of Vienna put on the market the first objective made according to Petzval's calculations, and by this materially contributed towards making photography popular. In this objective, depicted in Fig. 13, everything else was sacrificed to the aim of obtaining, with a great aperture-ratio of almost $f/3$,

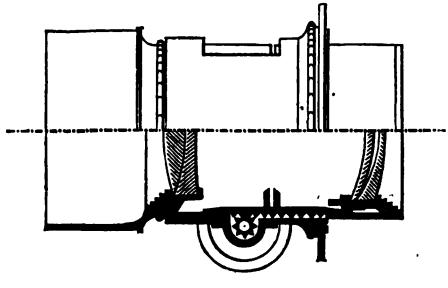

FIG. 13.—Petzval's Portrait-Objective.

an image of a point on the axis free from colour defects, and, above all, free from *spherical aberration* of the higher order. In spite of the great intensity of the light transmitted, the centre of the image should be well enough defined to permit of being enlarged many times.

If it is necessary to have one radius at one's disposal for the elimination of the first term of the series of spherical aberrations, so for the elimination of five terms, as in Petzval's objective, there are five conditions to be fulfilled.

Should one wish to satisfy these conditions, by putting together several suitable lenses *without distances between them*, spherical aberration up to a high order might doubtless be got rid of; but other faults of the *first* order would reappear which would only be caused to disappear if the system were such as to act merely like a plate with parallel sides (see p. 12 above). Accordingly, the lenses must be *separated* from each other, and in consequence the separated parts must be rendered achromatic each for itself, in order to obtain stable achromatism.[1] To the five spherical and the two achromatic conditions is added that of obtaining the prescribed focal length. These *eight* conditions were in Petzval's portrait-objective satisfied by the *seven* radii of curvature of the lens surfaces and *one* distance. In order to obtain this result all tentative guesses are useless, one must go to work by systematic calculation, as Petzval did. The Petzval objective carried out by Voigtländer would under favourable conditions produce pictures capable of being enlarged ten times; and it transmitted sixteen times as much light as the single achromat used by Daguerre. This great advance was, however, paid for by corresponding sacrifices which made this objective, so suitable for taking portraits, yet so very unsuitable for the taking of groups and landscapes.[2] All the efforts had been directed to the correction of the centre of the field alone, as a consequence of which the image outside the central region showed aberrations due to the

[1] By this term is to be understood achromatism such that for the given two colours that are brought to reunion, there shall be achromatism not only in the sense that the coloured images shall be found in the same focal plane, but that they shall be of the same size. In other words, there shall be achromatism of the principal points as well as of the principal focal lengths.

[2] These defects are even purposely exaggerated in the Dallmeyer-Bergheim portrait lens.

oblique pencils. This use of two widely separated members involves, on the other hand, a limited field of view, with an illumination diminishing up to the margin of the field, whilst, in consequence of there being six air-glass surfaces, a great number of reflected images are formed, so that the brightness of the image is not so great as with landscape achromats.

The Antiplanet of A. Steinheil [1]

There was, however, a serious objection which clung more or less to the older systems working with large apertures; namely, that in consequence of radial astigmatism the definition of the image diminished rapidly from the middle to the margin. With the object of getting rid of these evils, Steinheil in the year 1881 constructed his *Antiplanet* (Fig. 14).

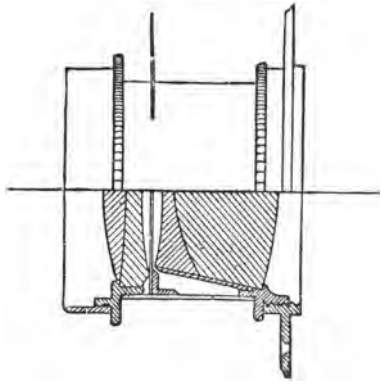

FIG. 14.—Steinheil's *Antiplanet*.

Upon the basis of most comprehensive calculations, Dr. Adolph Steinheil came to the conclusion that the image is the more uniform in sharpness *the more unequally the whole performance of the objective is divided between its two members.* Accordingly, both the members [2] I and II possess aberrations of opposite kinds of intentionally large magnitudes, and whilst the focal length of I is positive, but smaller than the focal length of the combination, II possesses a sufficiently large negative focal length. The first member I is subject to the faults of a simple positive lens, and the second member II possesses the faults of a simple negative lens. In this way radial astigmatism, *as well as image curvature, is diminished* over a certain field, but beyond this field the want of definition

[1] German Patent No. 16,354 of year 1881.

[2] From this point onwards it will be convenient, for all objectives that consist of two *separated* members, to denote the front member as I and the hinder member as II.

rapidly increases, so that outside certain limits, even when well stopped down, there is no sharp definition. The objectives considered in the following sections, which yield an image free from radial astigmatism, and also flat, could not possibly have been constructed prior to the invention of the new Jena glasses.

Zeiss Anastigmat, designed by P. Rudolph

The anastigmatic flattening of the field aimed at by anti-planets was finally attained in the two members of a composite unsymmetrical objective by means of *the principle of the opposed gradation of the refractive indices* enunciated by Dr. P. Rudolph of Jena. Steinheil had already obtained a reduction of the anomalies of the oblique pencils by the device of preserving in the two members of the combination intentionally high but opposed aberrations. But Rudolph was able actually to get rid of them by combining a spherically and chromatically corrected member made out of a pair of *ordinary* glasses with an approximately spherically and chromatically corrected member made out of an *anomalous* pair of glasses; or, as we may more simply say, according to our newly-founded definition, by combining a *new achromat* with an *old achromat*. Radial astigmatism can, however, only be got rid of when combining two achromats, each of which is approximately chromatically and spherically corrected, provided the astigmatic aberration produced by one achromat is *of opposite* sign to that introduced by the other. It may now be pointed out that a new achromat, in consequence of its cemented surface being a positive or convergence-producing one, does, in fact, bring in an astigmatic aberration of opposite sign to that brought in by the old achromat with its negative or divergence-producing cemented surface. In this opposition of function of the two cemented surfaces lies the importance of the opposed gradation of the refractive indices in the two lenses of Zeiss's *anastigmat*, as enabling the elimination of radial astigmatism to be effected. The new achromat at the same time offers, as we have seen, a means of correcting curvature of image. If, as in Zeiss's *anastigmat*, Fig. 15, a new achromat I is combined with an old achromat II of suitable construction, an approximate

elimination of the astigmatism of the oblique pencils may be attained without prejudice to the flattening of a large field. Also, in Zeiss's *anastigmat*, with a very considerable aperture-ratio an unusual uniformity of definition is obtained over a large angular width of field.

Each member of the anastigmat *per se* is only approximately achromatised; it is a good thing, however, if the combined system is free both from "chemical focus" and also from chromatic differences in the size of images.

The *Anastigmat* depicted in Fig. 15 is a wide-angled objective *giving great illumination*, and having a maximum aperture $f/9$. That in Fig. 16 serves as an *instantaneous* lens of great intensity. It consists of a double front-lens and a triple back-

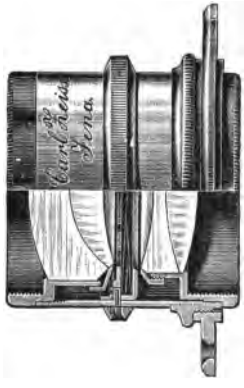

FIG. 15.—Zeiss's *Anastigmat*, Series III*a*.

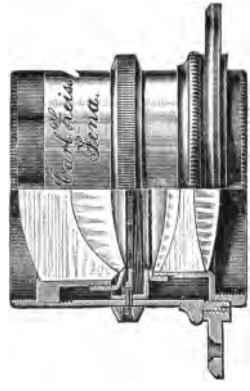

FIG. 16.—Zeiss's *Anastigmat*, Series II*a*.

lens, of course preserving opposite gradation of refractive indices in the two members. The fifth lens only serves to render possible the elimination of spherical aberration of *higher* orders, while employing a large aperture-ratio. There is a third series of anastigmats representing special wide-angled lenses.

Later on we shall speak of the attempts made by H. Schröder and A. Miethe, prior to those of P. Rudolph, to construct anastigmats by the use of *anomalous* glasses, which in these researches both inventors apply to double objectives, disposed *symmetrically* as regards the stop, and therefore consisting of *two identical* new achromats.

The Cemented Simple Objective, with Anastigmatic Image-flattening, composed of Three or Four Lenses.

The principle laid down and demonstrated by Dr. Rudolph, according to which an objective, in order that it may yield a flat and stigmatic image, must be so constructed, is, according to our nomenclature, that it should be composed *of a new and an old achromat, in one of which the cemented surface should possess a converging effect and in the other a diverging effect.* This principle once enunciated, it became a simple matter to construct a *single cemented objective* with anastigmatically flat field.

First consider the Zeiss anastigmat of Fig. 15 (so constructed)—how in it the outer surface of the second member (a new achromat) has the same absolute curvature as the outer surface of the first (an old achromat). Then if one were to reverse one of these members and cement them together, one would so obtain the anastigmatic simple objective designed by Rudolph in 1894,[1] and placed on the market by C. Zeiss under the name "anastigmat-lens $f/12{\cdot}5$," Fig. 17. This lens, according to Rudolph's statement, possesses, along with greater illuminating power and better definition, "a hitherto unattained perfection of the anastigmatic flattening of the field." Since this objective does not consist of separated members, it is not necessary that each of the latter should be in itself achromatic; it is rather preferable to admit large opposed aberrations in both members, in order to obtain other advantages. In this form the objective in a certain sense unites the antiplanet principle of Steinheil with the anastigmatic principle of Rudolph. At all events the more important conditions of construction depend only upon the special purposes of the objective, and on the kinds of glass available

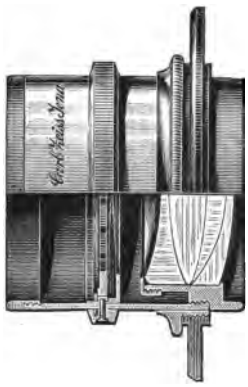

FIG. 17.—Zeiss's *Anastigmat*, Series VII.

[1] British Patent No. 19,509 of 1894: improvements in and relating to photographic objectives. See also *British Journal of Photography*, 1894, p. 829; or Eder's *Jahrbuch der Photographie*, 1895, p. 283.

in manufacture. Consequently the cemented members may possess the most diverse characters; they may be both positive, or one may be positive while the other is negative or even neutral, provided only that the system as a whole remains chromatically and spherically corrected. Also, the order of the lenses is a secondary matter, if only the type is so preserved that two of the lenses together form a new achromat with a *convergence-producing* cemented surface, and the two others an old achromat with a *divergence-producing* cemented surface; so that the Rudolph principle of opposite gradation of the refractive indices may be realised and the radial astigmatism compensated.

Suppose that in the *quadruple* anastigmatic simple objective the two middle lenses are replaced by a single lens whose refractive index lies *between* the indices of the two outer lenses, then we have a triple or *three-lens* objective (Fig. 18), which exhibits the above-defined opposed gradations of the refractive

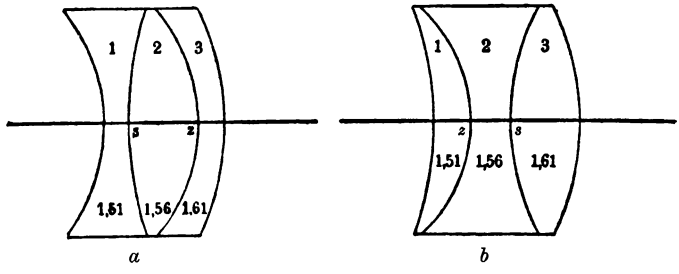

FIG. 18.—Triple cemented Anastigmatic Lenses.

indices, and also belongs to the anastigmatic type with two differently acting cemented surfaces (s = converging, z = diverging). Thus the Rudolph principle is preserved both in the case where the middle lens and the outer lenses have negative focal lengths (Fig. 18, *a*), and in the case where, conversely, the middle lens is a diverging lens, and the outer lenses have positive focal lengths (Fig. 18, *b*).[1]

An achromatic single objective of this kind, which consists of three lenses cemented together, and by which the image

[1] See the examples given on pp. 368-376 of the recent work on photographic lenses by Dr. M. von Rohr.

is rendered anastigmatically flat, besides being spherically corrected for points both on and off the axis, was constructed, even *before* the single objective, at the end of 1891, from the calculations of Dr. Rudolph, in the workshops of C. Zeiss. But it was first put on the market[1] by this firm in 1893 under the name *Anastigmat-satzlinse*, Series VI.

Independently of this, but also calculated out in the most simple form, an anastigmatically aplanatic single lens was designed by von Hoegh. A lens in accordance with von Hoegh's calculations was protected by patent[2] in December 1892 by the firm of Goerz, the patent covering particularly the combination of *two* such *triple cemented lenses* combined as a symmetrical double-objective, which was placed on the market under the name *Double Anastigmat.*

The firm C. Zeiss also combined two of its anastigmats, already corrected as simple objectives, to form its *Satz-anastigmat*, Series VI*a*. The manufacture of three-lens simple objectives has been nevertheless given up by this firm, since they possess in the cemented four-lens system a simple objective which surpasses the triple system in being of greater aperture, more fully stigmatically aplanatic, and better corrected with respect to the chromatic difference of the sizes of the images produced by it. The term *Satz-anastigmat* means "adaptable anastigmat" or "convertible anastigmat," and under the latter name they have been put in the market in England by the firm of Ross, Limited, who are licensees under the Rudolph patents (see Chapter XII.). Fig. 19 depicts a set of such convertible

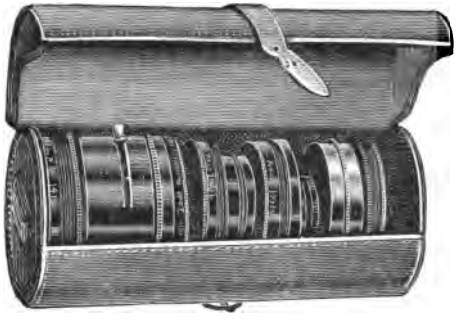

FIG. 19.—Set of Convertible Anastigmats.

[1] British Patent No. 4692 of 1893. See also *British Journal of Photography*, 1893, p. 331.

[2] British Patent No. 23,378 of 1892; German Patent No. 74,437. See also *British Journal of Photography*, 1893, p. 485; or *Photographische Mittheilungen* (Berlin, 1893).

anastigmats. When put together they make a wide-angled portrait lens; but either half can (with reduced aperture) be used singly as a landscape lens, three different focal lengths being thus available for use. The Satz-anastigmat objective is also known as Zeiss's *Protar*.

CHAPTER XI

DOUBLE-OBJECTIVES CONSISTING OF TWO SYMMETRICAL MEMBERS WITH THE STOP BETWEEN THEM

General Properties of the Double-objective

THERE was a time when, beside the ordinary achromatic cemented-lens landscape-objective, and the Petzval-Voigtländer portrait-objective, no lens existed which with a relatively large aperture gave wide-angled pictures that were sharp and free from distortion. At that time the resources of photographic optics were enriched by A. Steinheil by his *Aplanat*, which belongs to the type of double-objectives, and thus at a stroke an end was put to the want that had been felt. Before the aplanats were introduced, *symmetrical* systems had indeed been constructed, which, thanks to their symmetry with respect to the central stop, gave pictures free from distortion. But the necessary illuminating power, which was possessed by the aplanat of Steinheil, was absent from these systems. To the latter circumstance the aplanat, and with it the type of double-objective, owe directly their rapidly acquired popularity and extensive use.

Before considering the various kinds of double-objective, we will briefly describe those advantages which belong to *all* systems built up symmetrically with respect to the central stop, and which, simply in consequence of this disposition, are moreover independent of the qualities of the single components.

Let us to this end consider the *formation of the image* of an object situated at a distance equal to twice the focal length—the formation, in fact, of the image which is likewise,

as is already known, also situated at a distance of double the focal length at the other side of the lens, and is equal in size to the object. By the use of a double-objective, even when each member of the double-objective is merely a simple lens, the image will be endowed with three advantageous properties:—

(1) It is free from distortion and is perfectly similar to the object.

(2) It is of equal size for all the various colours, and is therefore free from chromatic differences of magnification.

(3) It is free from the defect of *coma*; that is to say, the one-sided residuum of the spherical aberrations of the oblique pencils is eliminated.

In Chapter VI. of this treatise the advantage of the orthoscopy of symmetrical double-objectives has been thoroughly investigated. With reference to the elimination of *coma*, it may be shown that every double-objective brings to one point the oblique pencils whose paths lie in a meridional plane, with the same accuracy and sharpness as it does the axial pencils.[1]

But this does not mean that the other rays of the oblique pencils also meet in the same point in which the meridional ones are brought to intersection. Further, the "astigmatic difference" of the oblique pencils remains, in spite of the symmetrical disposition of the two members, just as a bright point seen through a prism does not appear as a point when seen through a second reversed prism. A symmetrical double-objective is in general subject to a pure radial astigmatism, but *without coma*; at least so far as concerns images in the symmetric planes (situated at double focal length) for which the magnification is equal to minus unity.

If one regards as the image (conjugate to a point-object) the smallest (and in this case circular) cross-section situated between the focal lines, then these circles of least confusion lie in general on a curved surface. As the magnitude of the "astigmatic difference" depends upon the construction of the individual members, so the curvature of the image depends upon the distance by which they are separated. It is usually

[1] See Czapski, *Theory of Optical Instruments*, pp. 201 and 209; or Müller-Pouillet's *Optics* (9th edit.), pp. 774-76.

the case that, with a smaller distance between the members, the astigmatic difference decreases and the curvature of the image increases; while conversely, with an increasing separation of the members, the image becomes more and more flattened, and the astigmatic difference is increased.

So far as concerns the elimination of chromatism of focal lengths or of the chromatic differences in magnification for different colours, it must be remembered that an oblique ray incident upon a plane parallel glass plate emerges from the same *as a parallel beam of variously coloured rays*, whose directions are parallel to that of the incident rays.[1] If, in spite of this, a glass plate held obliquely to the direction of vision allows the object to appear without coloured edges, the explanation is that that which is united in one point in the image is not a single ray, but a bundle of rays emanating from a point-object. If one regards the rays of the bundles as rays parallel to one another, then in each emerging ray are a large number of differently coloured rays, each of which belongs to a different ray of the incident pencil. Since all these rays are reunited by the eye, they produce the sensation of white light.

Upon similar principles depends the action of the double-objective in forming from a white object images that are of equal size for all the constituent colours.

If one considers the zones of the two members of the double-objective, that are intersected by one chief ray, as replaced by the prism equivalent to them of equal refracting power, then it is seen that the same act together as a mere parallel plate of glass which is intersected obliquely by the rays; since both the substituted prisms have equally great refracting angles, and their respective surfaces are parallel each to each.

The white pencil of rays proceeding from a point-object we can further consider as an infinite number of variously coloured pencils. In consequence of dispersion, *the chief ray* belonging to each coloured pencil (which principal ray therefore intersects the axis in the middle of the stop or in the point of symmetry of the system) has a somewhat different direction of incidence.

[1] Compare Müller-Pouillet's *Optics* (9th edit.), p. 265.

Our assumption was that these various coloured rays of a pencil came from a point-object situated at a distance of twice the focal length; since all of these pass through the point of symmetry, and emerge each parallel to its direction of incidence, the emerging coloured chief rays of necessity cut each other in the point conjugate with the point from which they came, viz. the image point, which according to theory is likewise situated at a distance of double the focal length, and is at the same distance from the axis as the point-object. The *chief rays* of the variously coloured pencils, into which one may consider each white pencil of rays to be resolved, all cut each other, therefore, in a point.

If this point of intersection is identical with the focus or the circle of least confusion, for example, of the yellow pencil, then the effective centre of the circle of confusion of the red, blue, and other pencils will also lie in the same place, whilst the focus of these colours is situated in the same line, but a little nearer or more distant. They will all become coincident in one point if each individual member of the double-objective is achromatic.

VARIOUS KINDS OF DOUBLE-OBJECTIVES

In the *double-objective*, as the name already chosen by us should signify, the same individual member appears twice over. The path of the rays would remain geometrically exactly the same, if instead of a second member, the hole in the stop were reflecting. It follows immediately from this, that by duplicating one of the members it is impossible to eliminate those aberrations which are only to be got rid of by compensation of the oppositely acting factors; such, for example, are chromatism of the focal lengths, central spherical aberration, and radial astigmatism.

All these last-named aberrations must first be obviated in the *individual members* of the double-objective if they are not to render homocentric focussing of the axial and the oblique pencils illusory. Accordingly, the development of the symmetrical double-objective depends upon the improvement of the single objective, so far as the latter is applicable for combination in symmetrical pairs.

Certainly nothing stands in the way of applying any objec-

tive, be it the portrait-objective of Petzval, the antiplanet of Steinheil, or the anastigmat of Zeiss, as a member of a double-objective. Only there arises a second important question, whether it pays to bear the expense which the duplication of a simple member entails, in order to win the advantages associated with every double-objective. If, for instance, one arranged two Zeiss anastigmats symmetrically with respect to the centre of the stop, in order to add aplanatic advantages to the anastigmatic ones, there would be flare-spots due to the repeated internal reflexions, and a considerable consequent diminution of light. There would also be a very small field of view, on account of the length of the system, a field in which, moreover, the brightness would diminish rapidly from the middle to the edge.

In practice hitherto only simple objectives made out of *cemented* lenses have been used as members of a double-objective. However many simple objectives we possess, so many kinds of double-objectives can exist and actually do exist. As simple objectives we have recognised the following types:—

(1) Simple converging lens.
(2) Two-lens old achromat.
(3) Two-lens new achromat.
(4) Three-lens cemented objective with anastigmatically flattened field.
(5) Four-lens cemented objective with anastigmatically flattened field.

DOUBLE-OBJECTIVE TYPE NO. 1

The complete sphere (Fig. 5, p. 30) with a small central stop may be considered as the simplest representative of No. 1 double-objective. One may think of the same as composed of two hemispheres I and II, which are cemented together at their middle parts (*ab*) and stopped off up to this region. In this case neither refraction nor dispersion of the chief rays takes place.

Next to the complete sphere-objective comes the *panoramic lens* of Sutton (1859). In this the interior space of the hollow sphere, which constitutes the simple lens, is filled with water.

The best No. 1 type double-objective made up of simple lenses is the *Periscope* of Steinheil (1865), Fig. 20. On account of its relatively great illuminating power, along with its "artistic" fuzzy definition, on account also of its cheapness and the great brilliancy of its pictures, the Periscope has since 1890 enjoyed great popularity, and its manufacture has recently been taken up again.

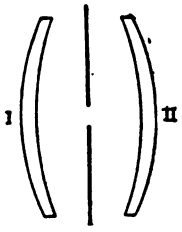

FIG. 20.—Steinheil's *Periscope.*

DOUBLE-OBJECTIVE TYPE NO. 2

Harrison's *Spherical-objective*, Busch's *Pantoscope*, as well as Steinheil's *Aplanat* (Fig. 21), belong to Type No. 2 of double-objectives, made with two old achromats as individual members.

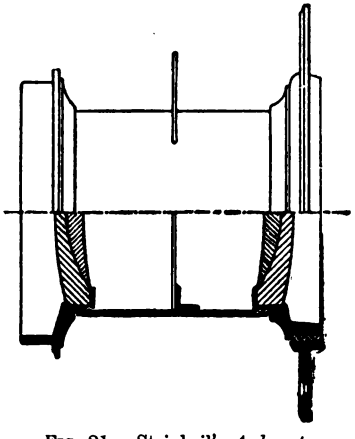

FIG. 21.—Steinheil's *Aplanat.*

With the exception of Steinheil's Aplanat, the above-named double-objectives can only be used with a very small aperture-ratio, since, when used with larger stops, they render even points on the axis indistinct.

If one would further combine with the advantages of the double-objective naturally consequent upon the symmetrical disposition of its members with respect to the central stop, those of high illuminating power, one must not renounce the use of achromatic lenses. Also any very steep curves, such as those of Harrison's spherical-objective and of the Pantoscope of Busch, must be abandoned; so we must turn to the use of slightly curved menisci, if spherical aberration is to become of small amount with a large aperture, and the image as flat as possible. When in our design we have satisfied the several conditions for the elimination of spherical and chromatic aberration, and for obtaining a given focal length, all the variable elements at our disposal in the construction of a

cemented achromat are exhausted; and since in the symmetrical double-objective the two members are exactly alike, then the only new elements that come in are the distance between the individual members and the choice of the kinds of glass.

Should an improvement upon the above-named objectives be sought after, then all care must be devoted to the *individual* members, and they must be constructed out of such glasses, that while the whole system is corrected for the greatest possible aperture-ratio, it shall also transmit with the smallest aberrations oblique pencils of the widest cross-section. The credit of having fulfilled these conditions, as completely as the glasses of that time allowed, is due to Adolph Steinheil as early as the year 1866.

The achromat used by him consisted of two Frauenhofer flint glasses, and possessed the form of a meniscus. Obviously, one may to-day apply the new Jena glasses to the construction of the individual members of the aplanat in the same way. Indeed, the only distinction between the various types of aplanats lies in the kinds of glass selected, and the consequent modifications in the form of the achromats. In the *group-aplanats* of high illuminating power the achromat is spherically corrected for a relatively great aperture, and the members are set at moderately great distance apart; on the other hand, in the *wide-angle aplanat*, while the members are of lower illuminating power, but better adapted for oblique pencils, the distance between the components is chosen as small as permissible.

As might be expected in view of the small number of applied elements and the nature of the achromat, the aplanat cannot be corrected either in respect of the astigmatism or of the curvature of the field. But the image can be improved, either with regard to the flattening of the field or to astigmatism, by separating the components. In order to diminish the curvature of the image, when the aperture-ratio is large, a large distance between the two components may be chosen (see p. 58); whilst, when using a small stop and wide field of view, one endeavours to render astigmatism as small as possible by lessening the distance between the members.

Ever since the year 1886 Steinheil has constructed aplanats with a variable distance between the two components, which,

with full aperture and small distance, act as group-objectives giving large illumination, and on the other hand, with small aperture and great distance between the components, act as wide-angle objectives, and consequently within a certain range unite in themselves the diverse types of aplanats.

The fact of such a change in the distance separating the two components being successful in practice is clear evidence that even in the best case perfect stigmatic reunion of the rays cannot be obtained by means of the aplanat type. For the process here is similar to that in the case of a simple achromatic landscape lens with an anterior stop, in which, by a displacement of the stop, the position of the image and a consequent artificial flattening of the image can be obtained, simply because the rays do not come strictly to point-foci (see p. 27).

At all events, the aplanat which combined correct delineation and a wide angle with great intensity of illumination marked a great improvement upon the objectives existing prior to that time.

Of the remaining objectives which belong to the type of aplanats may be mentioned the *Euryscope* of Voigtländer, the *Lynkeiscope* of Goerz, the *Pantoscope* of Hartnack, and the *Rectilinear* of Dallmeyer. For the numerous names under which other examples of the aplanat have been brought, the work of J. M. Eder, *Die photographischen Objektive, ihre Eigenschaften und ihre Prüfung* (Halle a.S., Verlag von Wilhelm Knapp, 1891, S. 104), may be consulted.

DOUBLE-OBJECTIVE TYPE NO. 3

A special place among aplanats composed of two double-lens components is taken by Schröder's *concentric lens*,[1] and also by Miethe's *anastigmat*.[2] They represent the double-

[1] Ross-Concentric Lens of Dr. Schröder, British Patent No. 5194 of the year 1888; *Photog. News*, 1889, S. 316. The objective first came into the market in 1892. See *Brit. Journ. of Photography*, No. 1669, 30th April, 1892.

[2] A. Miethe, *Der Anastigmat;* Vogel's *Photog. Mitth.* 25, S. 123 and 173 to 174. Miethe's first *anastigmat* was calculated out in 1888, using a highly refracting phosphate crown, and a very light flint glass, and was constructed by Hartnack of Potsdam. But the phosphate crown does not stand atmospheric exposure well, and this was found to be an objection. This lens might be described as an aplanat made of two equal new achromats symmetrically arranged.

objective No. 3, which consists of two new achromats. Since the lenses are cemented, only three radii stand at one's disposal in this case, as in the old achromat. Of course, with new achromats flattening of the field is at once approximately obtained by the choice of suitable glass (see p. 50). For the removal of astigmatism there is, however, in this case no fourth variable element at one's disposal; for by the duplication of the new achromat to form a double-objective one does not obtain both a positive and negative cemented refracting surface, as in the case of the combination of a new achromat with an old achromat in the Zeiss-Rudolph anastigmat (see p. 62). Experience shows, and it is also deducible from our systematic treatment of the subject, that these double-objectives cannot, in consequence of the aberrations of the *oppositely acting cemented refracting surfaces*,[1] produce chromatically and stigmatically corrected images, which are at the same time spherically corrected. By choosing the concentric form Schröder obtained very good flattening of the field and little radial astigmatism, but this form of lens is at a disadvantage with respect to the spherical correction, upon which so much the more stress must be laid, since the new achromat is not susceptible of being spherically corrected so well as the old achromat.

Only quite recently, since the date when it became possible to obtain a sufficiently anastigmatic flattening of the field by means of triple or quadruple cemented lenses (so following out Rudolph's principle applied in Zeiss's anastigmat), have the obstacles been removed which stood in the way of constructing "anastigmatic aplanats." By this term is meant a system which, by its symmetrical construction, combines the advantages peculiar to the aplanat with those that are special to Zeiss's anastigmat.

[1] After Professor Miethe had pointed out, on p. 87 of his book on *Photographic Optics*, that in the objectives denominated by us "new achromat" it is also possible to reduce to within narrow limits the axial aberrations, and to construct with them aplanats of sufficient intensity, he continues thus: "The lens-systems carried out according to these principles, and called *Anastigmats*, are still subject to certain aberrations, both of a mechanical and of an optical nature. Firstly, the distances of the lenses must be made relatively very great; secondly, the removal of astigmatism over the whole field is not possible; and, thirdly, the crown glass used is not sufficiently proof against climatic deterioration to be good for photographic purposes."

DOUBLE-OBJECTIVE TYPE NO. 4

In this type each component consists of an objective of three lenses cemented together, and which is already more or less spherically and chromatically corrected, and yields an anastigmatically flattened image.

1. *Double Anastigmat of C. P. Goerz.*—The *first* objective of this kind was brought into the market in the year 1893 by C. P. Goerz, under the name *Double Anastigmat*, and was made according to the computation of Herr von Hoegh. It is depicted in Fig. 22. According to the data of Goerz's catalogue, the double anastigmat has, with an aperture-ratio $f/7{\cdot}7$, an angle of 70° (degrees), and with a smaller aperture-ratio a field of as much as 90°. The typical form of triple cemented component has been described on p. 65, to which description we may refer so far as relates to the single components. With respect to its performance as a whole, the double anastigmat marked a distinct advance over the ordinary aplanats. How far its performance may be appraised when compared with the anastigmat of Zeiss, consisting of five lenses only, there is not yet any decided concensus of opinion.

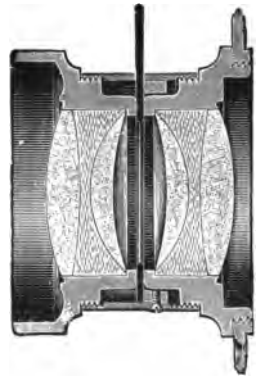

FIG. 22.—Goerz's *Double Anastigmat.*

In the patent specification of Goerz there is stated as a second claim the use of one component of the double anastigmat as a single objective, yet the double anastigmat has mainly acquired its reputation *as a compound system*, and might well be designated, when it appeared, as *the best symmetrical double-objective.*

Goerz has also produced[1] a form of *Double Anastigmat* (Fig. 22A) in which the symmetrical components each consist of five lenses cemented together. There are thus six different radii of curvature, and at least four different kinds of glass are used, the refractive indices of the five lenses, beginning with the convex outermost lens, being as follows: 1·61, 1·54,

[1] British Patent No. 2854 of 1899.

1·52, 1·61, 1·51. In order to attain the greatest intensity, the first or outermost lens must have the highest refractivity, and the last or innermost (concave) must have the lowest possible refractivity. Spherical aberration is corrected by the second surface, which is a negative or diverging one; and the difference of the refractivities of the two media which it limits must be small—not more than 0·07—because it is necessarily of a deep curvature, its depth being determined by the condition that the chief rays of oblique pencils must meet it at as small a refracting angle as possible, otherwise there would be accumulated distorting effects that could not be compensated by the subsequent refractions. To fulfil the anastigmatic condition are provided the fourth and fifth surfaces, one convex, the other concave, and as each of these is to act as a collecting surface, the medium between must have a higher refractive index than either of those that adjoin it. The fourth surface serves to neutralise distortion for oblique pencils, while the fifth must be as flat as possible, to prevent curvature of the image. Hence the last lens must have a very low refractivity, and the last but one a very high refractivity. Thus it becomes needful to insert between the first and third lenses a positive lens of intermediate refractivity, its second surface being either slightly concave toward the light, or slightly convex, as may be required to correct for chromatic differences of the spherical aberration. In other respects this surface effects little, because the mean refractivities of the materials on the two sides of it are nearly alike. In order to secure a good and unalterable centering, the three negative lenses are made so that

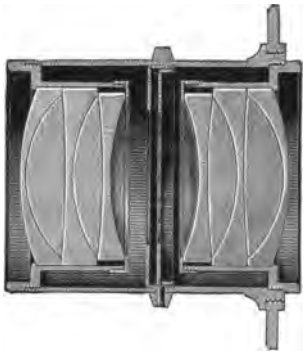

FIG. 22A.—Goerz's *Double Anastigmat*, Series IIa.

FIG. 22B.—Goerz's *Convertible Anastigmat*, Series II.

they project over and completely enclose the two positive lenses.

The Goerz *anastigmats* are also made up as unsymmetrical compounds, with a smaller size of component for the second member, as in Fig. 22B. The individual components can be used singly as landscape lenses, the combination being thus convertible. The aperture-ratio of the *double anastigmat* is stated as $f/5{\cdot}5$, and that of the single component as $f/11$.

2. *Convertible Anastigmat, Series VIa., of Carl Zeiss.*—The triple anastigmat of the firm Carl Zeiss, mentioned on pp. 64 and 65, admits, with great advantage, of being duplicated to form a symmetrical objective. The *convertible anastigmat* (or "Satz-anastigmat"), constructed of two three-lens components of *equal focal length*, is expressly within the type of double anastigmats. Since the components are separately corrected as well as possible, it makes no practical difference in the performance of the double-objective, with respect to sharpness and anastigmatic flattening of the field, whether the two components of which it is composed be of equal or unequal focal length. The form with unequal components, depicted in Fig. 23, belongs to the class denoted *Satz-anastigmat*, Series VI*a*. In consequence of this circumstance one may combine in pairs any of a series of two or three different sizes of the single anastigmat of Series VI., and make of them very good *anastigmatic compound lenses*. For instance, the two components of Fig. 23 might each be used separately for landscape or group purposes, thus affording in one lens three different possibilities. Because these combinations are possible, the name *Satz-anastigmats*, meaning adaptive or convertible anastigmats, is given to this series.

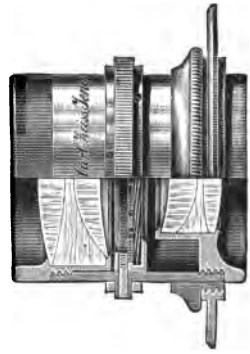

FIG. 23.—Zeiss's *Anastigmat*, Series VI*a*. (or *Convertible Anastigmat*).

3. *Collinear of Voigtländer und Sohn.* — The collinear shown in Fig. 24, which was computed by Dr. Kaempfer,[1] is similar to the double anastigmat composed of two similar triple components. Each individual member consists of a

[1] *Photog. Korr.* 1894, S. 495; see also Catalogue of Voigtländer und Sohn.

middle converging meniscus lens of *lower* refractive index cemented to two lenses of *higher* index, of which that facing the stop is bi-concave and the other bi-convex. In this wise there are brought into existence both a converging and a diverging cemented surface, as is required for producing the anastigmatic flattening of the field. In this case also the component is subordinated to the performance of the system as a whole. As a double-objective the *collinear*, according to

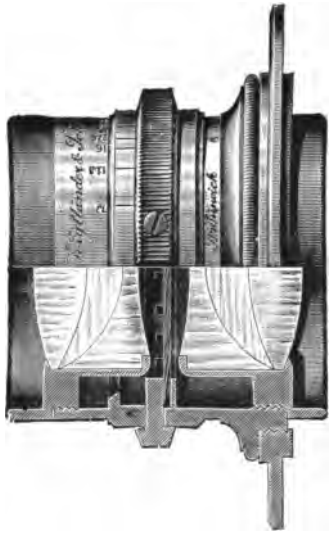

FIG. 24.—Voigtländer's *Collinear.*

FIG. 25.—Steinheil's *Orthostigmat.*

the inventor, is well corrected spherically for an aperture-ratio of about $f/7$, and possesses also good anastigmatic flattening with a wide extent of field. These lenses are now manufactured in England under the Voigtländer patents by Messrs R. and J. Beck.

4. *Orthostigmat Type II. of C. A. Steinheil Söhne.*—The orthostigmat Type II., shown in Fig. 25, has been brought out commercially quite recently [1] by C. A. Steinheil and Sons. Belonging to the same type as the collinear, it consists likewise of two components, each of three lenses cemented together, of which the middle one has a lower index of

[1] With regard to the date of its appearance, the most recent catalogue of C. A. Steinheil Söhne gives information.

refraction than the outer. The details of construction were published in the *British Journal of Photography*, 1896, p. 489.

Double-objective Type No. 5

This double-objective is represented by the convertible anastigmat, Series VII*a*., of Carl Zeiss, which consists of two quadruple cemented components of equal or unequal focal length, and in its later form is shown in Fig. 26. Since in quadruple components the theoretical possibility of obtaining anastigmatic flattening is more perfectly realised than in the case of triple components, the convertible anastigmats of Series VII*a*. should possess theoretically a still higher efficiency. With respect to the correction of the components of Series VII*a*., what was previously said of the convertible anastigmats of Series VI*a*. applies directly to this case also—viz. that excellent anastigmats can be made by combining various simple objectives of Series VII.; on account of which they have rapidly come into acceptance.

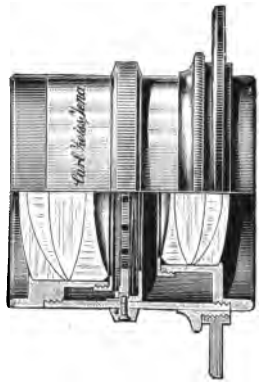

Fig. 26.—Zeiss's *Anastigmat* Series VII*a*. (convertible).

Zeiss's Planar and Unar

With the eight-lens convertible anastigmats, Series VII*a*., the improvement of photographic objectives appears to have attained a certain limit in one direction, namely, that in which the aim was the utilisation of the new Jena glasses (by the application of Rudolph's principle of correction), whether in the single objective, the double objective, or in the convertible objective. Nevertheless, Dr. Rudolph has designed for Messrs. Zeiss, under the name of *Planar*, a symmetrical lens having certain advantages over the double anastigmat. In this lens Rudolph starts from the principle of the telescope objective of Gauss. It is well known that Gauss had shown that if an

achromatic objective is made of the form shown in Fig. 27, instead of the ordinary cemented form (such as Figs. 9 or 10, p. 44), it is possible, since there is one more radius available, to which there can be assigned any desired value, not only to make the combination achromatic, but to make it such that it corrects the spherical aberration for two different parts of the spectrum, and so gets rid of the chromatic differences of the spherical aberration. To adapt such a lens to photographic work, it must be modified so as to give it the additional property of anastigmatically flattening the image. This depends upon finding suitable sorts of glass. In the modified lens-system, either one lens or the other, or both, is made up of a cemented pair chosen so that both the kinds of glass used have the same, or nearly the same, mean refractive index, while possessing very different dispersing power. Any cemented pair, so constructed, will act, so far as mere refraction is concerned, simply as a homogenous single lens, while, so far as its dispersive power is concerned, it may be achromatic, or under-corrected or over-corrected for colour, according to the curvature chosen for the cementing surface. Hence the outer curvatures and thicknesses of the lenses may be predetermined so as to correct for spherical aberration, coma, and curvature of field, leaving to subsequent independent calculation the choice of the curvature of the internal cemented surface upon which the colour-correction depends. Obviously success in using this principle depends upon having a sufficiently large selection of glasses from which to select those suited for the purpose. A slight departure from exact agreement in the mean refractivity is quite admissible, and indeed

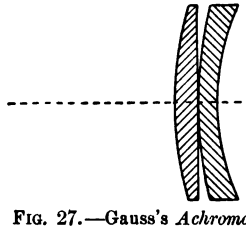

FIG. 27.—Gauss's *Achromatic Objective.*

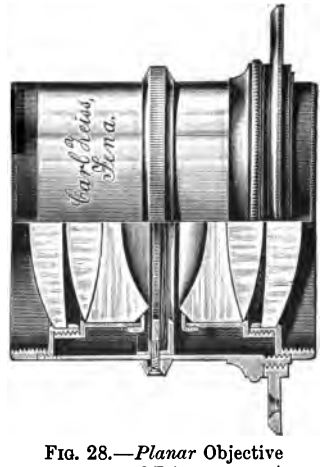

FIG. 28.—*Planar* Objective of Zeiss.

has the advantage of enabling the lens better to approximate toward fulfilling the sine-condition for elimination of coma. The *Planar* lens depicted in Fig. 28 is that manufactured from Rudolph's specification by Messrs. Ross of London. It has a view-angle of from 62° to 72°, according as its aperture-ratio is adjusted from $f/3{\cdot}8$ to $f/6$; and is therefore a very rapid wide-angle lens, well adapted for copying processes of all kinds and for instantaneous taking of groups and portraits. They are, however, inferior for architectural work to the anastigmats.

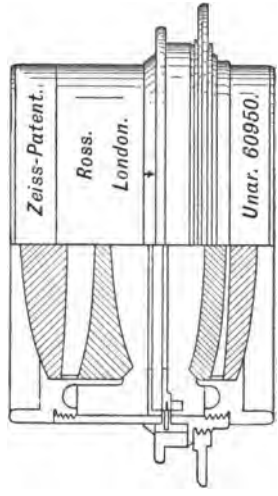

FIG. 29.—Zeiss's *Unar*.

The very latest lens of Messrs. Zeiss, constructed from the computations of Dr. Rudolph, is denominated the *Unar*.[1]

This lens (Fig. 29) is not symmetrical, and therefore strictly belongs to the class described in the preceding chapter. Its front member consists of two separated lenses, with an air-space between them resembling a positive meniscus, while the hinder member also consists of two separated lenses, the air-space between them having the form of a negative meniscus. The hinder member is therefore like a Gauss objective, while the front member recalls the back part of a Petzval lens. But neither part is by itself corrected for colour. Only two kinds of glass are employed, the two outer lenses (both positive) being of a dense baryta crown, having a mean refractive index of about 1·61, while the two inner lenses are of an ordinary light flint of about 1·57. It might be thought that, as only two kinds of glass are used, the system would not fulfil Rudolph's anastigmatic principle of opposed gradation. But a little consideration will show that the convex air-meniscus in the front component operates like a negative lens, while the concave air-meniscus acts like a positive lens. Hence the former acts like the z surface of Fig. 18, *a*, p. 65, whilst the latter acts like the s surface of that figure. In its properties the

[1] British Patent Specification No. 2489 of 1899.

Unar is intermediate between the *Anastigmats* and the *Planar*. The 6-lens *Planar*, with an aperture-ratio of $f/3{\cdot}6$, covers a field of about 65°; while an 8-lens *Anastigmat*, with aperture-ratio ranging between $f/6{\cdot}3$ and $f/8$, covers a field of 80°. The 4-lens *Unar*, with an aperture-ratio of $f/4{\cdot}5$, covers an angular field of about 70°. It is therefore admirably adapted for the general purposes of the amateur, and has the merit of exceedingly simple construction.

CHAPTER XII

SOME RECENT BRITISH OBJECTIVES

No account would be complete that dealt only with objectives manufactured by the great German firms, and accordingly some corresponding information is here added respecting some recent British lenses.

Ross's Lenses

The firm of Ross had already, under the technical advice of Dr. Schröder, produced the *Concentric lens* of which mention was made on p. 56; and Ross's concentrics are well known for their excellent qualities as to covering power with small apertures. These were the first camera objectives in which use was made of the new Jena glasses having relatively high refraction with small dispersion.

FIG. 30.—Ross's Concentric Objective.

Ross's concentric lenses have, however, been for some years largely superseded by the more modern anastigmats, which are manufactured under licence under the Rudolph patents, and double anastigmats under the Goerz patents (p. 77).

FIG. 31.—Ross's Wide-angle Symmetric Lens.

Fig. 30 shows the construction of the Ross concentric lens, used for landscape and copying. With aperture-ratios of $f/16$ to $f/45$, it gives excellent definition over an angular field of about 75°, but is not rapid enough for many purposes. Fig. 31 depicts the Ross wide-angle symmetrical lens, used for views, architectural work, and the like, requiring a field of

90°. With aperture-ratios $f/16$ to $f/64$ it gives good definition and practical freedom from distortion right up to the margin. In this lens the components are simply cemented achromats.

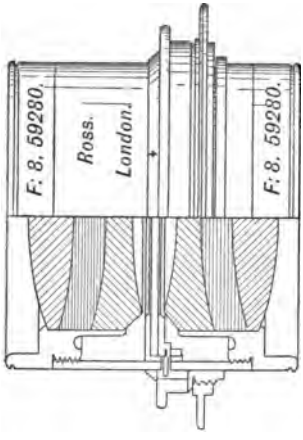

FIG. 32.—Ross's *Universal Symmetric Anastigmat.*

More recently, besides adopting the Zeiss anastigmats and convertible anastigmats described in the previous chapter, the firm of Ross, Limited, has put on the market a form of very rapid lens known as the *Universal Symmetric Anastigmat* ("new extra rapid series"), having an aperture-ratio of $f/5{\cdot}6$. These lenses surpass the older symmetrical lenses in definition, and are excellent for animal studies and street scenes, as well as for groups and portrait work. With the aperture-ratio given, they cover a view-angle exceeding 65°. Each component consists of a triple-cemented lens in which three kinds of glass are used. It therefore has a certain resemblance with the *Collinear* of Voigtländer. As it is not patented, no data of its radii of curvature have been published.

DALLMEYER'S LENSES

The firm of Dallmeyer (now J. H. Dallmeyer, Limited) has long enjoyed a high reputation for its *Triple Achromatic*, *Wide-angle Rectilinear*, and *Rapid Rectilinear* lenses, the successive introductions of the late Mr. J. H. Dallmeyer. The labours of Mr. T. R. Dallmeyer and of Mr. Hugh L. Aldis have resulted in various new developments, including the Telephotographic objectives described in Chapter XIII., and the new *Stigmatic* lens now to be described.

In designing the *Stigmatic* lenses, which are double-objectives, the symmetrical form has been abandoned in order to obtain a new means of eliminating astigmatism and spherical aberration. They consist of two components, each approximately corrected for chromatism. As originally designed and

described in the patent specification, the front component consisted of a positive meniscus system, possessing strong positive spherical aberration, made up of two (or of three) lenses cemented together, the negative lens having the higher dispersive power. The back component admitted of several varieties, but essentially it consisted of an inner positive meniscus, separated by an air-space from a hinder stronger negative meniscus, one or both of these menisci being made as a cemented pair, so as to secure achromatism for the back component, so operating together that the whole back component is a weak negative lens, having a negative spherical aberration sufficiently great to compensate the positive spherical aberration of the front component. This design, substantially that shown in Fig. 33, has more recently been reversed, back for front, as in Fig. 34. In symmetrical double-objectives, as has been previously pointed out, each of the component systems must be spherically corrected, and the duplication merely enables distortion of the image to be eliminated. But in order to correct a compound lens for spherical aberration, its positive component must, under most conditions favourable to the construction of photographic lenses, have a lower refractive index than the negative component (in other words, it must be an old achromat, see p. 46), and this condition renders correction for chromatism and for radial astigmatism less easy. In order to escape this difficulty, the designers of the Stigmatic lenses reverted to the earlier unsymmetrical form of objective, and obtained correction, just as did Steinheil, by causing the faults of the two components to neutralise each other. As already stated, the back component consists of two parts, the first a converging meniscus, and the second a stronger diverging meniscus. It is an essential part of the design that the last surface of the former has a flatter curvature than the first surface of the latter, so that they enclose an air-space of the form of a positive meniscus. This meniscus air-lens, bounded by glass, acts therefore as a diverging lens. By this device the back component is caused to have a great negative spherical aberration, and yet the converging glasses may be of high refractive index, and the diverging ones of a relatively lower index. In this way they are enabled to fulfil also the fourth of Seidel's conditions (p. 47), which secures flatness of field.

Mr. Aldis has given[1] the following statement of the point. Using the symbols μ, μ', etc., for the indices of refraction, and r_1, r_2 and r'_1, r'_2 for the respective radii, the condition for securing flatness of field is that the sum of all the terms, such as

$$\frac{\mu-1}{\mu}\left(\frac{1}{r_1}-\frac{1}{r_2}\right)+\frac{\mu'-1}{\mu_1}\left(\frac{1}{r'_1}-\frac{1}{r'_2}\right)+\text{etc.},$$

should be zero. This was, indeed, first pointed out by Petzval, and is practically identical with Seidel's fourth condition. Aldis then goes on to observe that in order to realise this condition as far as possible, three conditions have to be observed :—

(1) The converging lenses should be of glass of high refractive index, and the diverging lenses of low refractive index.

(2) Diverging components should be separated by a considerable interval from converging components.

(3) Thick meniscus lenses should be used.

In order to reconcile the first of these conditions with the condition of achromatism, it was necessary to have recourse to one of the new Jena glasses having high refractivity and

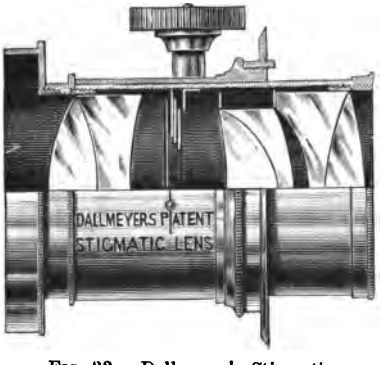

FIG. 33.—Dallmeyer's *Stigmatic* Lens, Series I.

FIG. 34.—Dallmeyer's *Stigmatic*.

low dispersion—in fact, a dense baryta crown—for the converging lens. In the patent specification three numerical examples are given. They differ mainly in regard to the back component. In the first form the positive meniscus is a single crown lens

[1] See specification of Patent No. 16,640 of 1895.

LIBRARY OF THE UNIVERSITY OF CALIFORNIA

of high refractivity, while the negative meniscus is a cemented lens. In the second form, which resembles that used in Fig. 33, both parts of the back component are cemented lenses. As described in the specification, all the converging lenses are of dense baryta crown, while both the diverging lenses used in the back component are of a light silicate crown. In the third form, which resembles Fig. 34, but reversed in direction with respect to the light, the first part of the back component is a cemented lens, while the second part is a simple negative meniscus of light silicate crown glass.

Fig. 33 represents *Stigmatic* lens (Series I.) of aperture $f/4$, which is a portrait lens. The following are the data, kindly furnished by Mr. T. R. Dallmeyer, as applied to a lens of 10 inches equivalent focal length. The glasses used are of the following kinds:—

Lenses $L_1L_3L_6$, $\mu = 1{\cdot}5726$, $\nu = 57{\cdot}5$ (O 211).
Lens L_2, $\mu = 1{\cdot}5738$, $\nu = 41{\cdot}4$ (O 569).
Lenses L_4L_5, $\mu = 1{\cdot}5151$, $\nu = 56{\cdot}6$ (O 114).

The several radii of curvature are as follows:—$r_1 = -2{\cdot}74$; $r_2 = +3{\cdot}92$; $r_3 = -4{\cdot}07$; $r_4 = +4{\cdot}39$; $r_5 = +1{\cdot}46$; $r_6 = +2{\cdot}89$; $r_7 = +1{\cdot}67$; $r_8 = -5{\cdot}65$; $r_9 = +2{\cdot}74$.

The several thicknesses are as follows:—$d_1 = 0{\cdot}67$; $d_2 = 0{\cdot}42$; $d_3 = 0{\cdot}43$; $d_4 = 0{\cdot}12$; $d_5 = 0{\cdot}10$, but is slightly adjusted in different cases; $d_6 = 0{\cdot}17$; $d_7 = 0{\cdot}50$; $d_8 = 3{\cdot}65$.

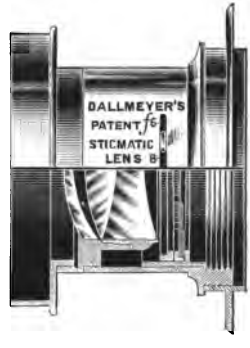

FIG. 35.—Front Component of the Dallmeyer *Stigmatic* used as a single lens.

These lenses, like the convertible anastigmats of Zeiss, are capable of being separated and the components used as independent lenses. Fig. 31 above represented a Stigmatic lens (Series II.) of aperture $f/6$, capable of use as a universal lens with a view-angle of nearly 70°; but if stopped down to $f/16$, it has a view-angle of 85°. Fig. 35 represents the front component as used alone, and Fig. 36 the back component as used alone, for landscape purposes. The former has a focal length about two times, the latter a focal length about one and a half times, as great as that of the combined system. Fig. 37

depicts a non-convertible form of Stigmatic lens (Series III.), having aperture-ratio $f/7{\cdot}7$. In this form the front component

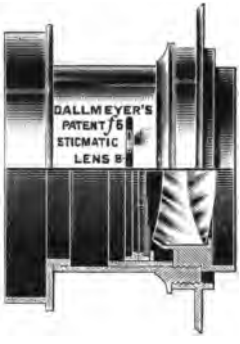

FIG. 36.—Back Component of the Dallmeyer *Stigmatic* used as a single lens.

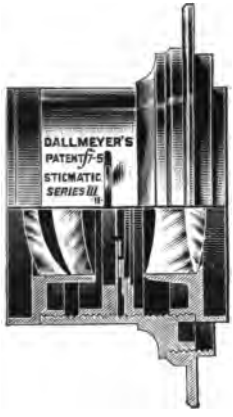

FIG. 37.—Dallmeyer non-convertible *Stigmatic* Objective (Series III.)

is that containing a positive air-meniscus, while the back component is cemented.

THE COOKE-TAYLOR LENSES

Mr. H. Dennis Taylor, of the well-known firm of optical engineers, T. Cooke and Sons, of York, has devised an objective which is of special interest from its extreme simplicity, in spite of which it gives, within the range of its capabilities, a precision of performance probably unsurpassed by any more complex lens. These Cooke lenses are placed on the market by Messrs. Taylor, Taylor, and Hobson, of Leicester; and they are also manufactured in Germany by the Voigtländer establishment under the name of *Triple Anastigmats.*

The Cooke lens consists of three parts, the front and back components being positive lenses, whilst between them, adjusted carefully to an intermediate position, is a strong negative lens. Mr. Dennis Taylor's original idea appears to have been[1] to make each of the positive lenses of a cemented pair, each pair corrected for colour and for central aberration,

[1] *Journal of the Camera Club*, March 1895, p. 30. See also specification of British Patent No. 22,607 of 1893.

and to throw upon the intermediate negative lens the whole burden of the work of lengthening out the oblique pencils so as to correct for coma, astigmatism, and curvature of field. He also put forward from the beginning the idea that the negative power of this intermediate lens should be approximately equal to the sum of the powers of the two outer positive lenses, the resultant power being not zero, but positive because of the separation between the lenses. The conception underlying this feature of the design is apparently derived from the intention approximately to fulfil von Seidel's fourth condition (see pp. 47 and 49), the physical meaning of which is to the effect that, *if in the construction of the separate lenses the glass used were all of one kind*, so far as mean refracting power is concerned, and the separate lenses were all pushed up close together, it would act like a plane thick sheet of glass. Seidel showed that the fulfilment of this condition suffices to give a stigmatically flat plane to the image. Mr. Dennis Taylor's principle is that the separate lenses, if all pushed up close together, should act like a plane thick sheet of glass, whatever the refractive indices of the glass. Hence if, as in fact is the case, glasses of different mean refractivities are employed for the different lenses, the adoption of the principle of making the power of the negative lens equal to the sum of the powers of the two positive lenses can satisfy von Seidel's fourth condition only approximately.

It then occurred to Mr. Dennis Taylor that it was not necessary for all the lenses to be made of achromatic cemented pairs. He made the two positive outer lenses simple crown glass lenses (approximately of the form of "crossed" lenses with the greater curvature outwards), and placed between them an over-corrected powerful concave cemented lens to compensate for their aberrations. It was indeed no novelty, *per se*, to place a concave lens between two convex outer lenses. That had been done years before by Sutton, by Dallmeyer, and also by Steinheil in his portrait Antiplanat. Neither was it novel, *per se*, to use a central over-achromatised lens to correct the chromatic aberrations of the outer members. That had been done before by Abbe and Rudolph, who, however, applied a central triple-cemented lens of nearly zero magnifying power, which could therefore have no

sensible effect on the equivalent focal length or on the curvature of the field. But it does appear to have been novel to make the power of this negative central lens approximately equal to the sum of the powers of all the positive lenses. In brief, Mr. Dennis Taylor intended his central correcting lens to perform the triple function of (1) correcting for chromatic aberration; (2) correcting both axial and oblique pencils for spherical aberration; (3) correcting the combination as regards flatness of field and marginal astigmatism. To secure the first point requires proper choice of glass as respects dispersion. To secure the second involves adoption of proper curves and distances. To secure the last requires the fulfilment (at least approximately) of von Seidel's fourth condition. In order, as he supposed, to give the overachromatising power to this central negative lens, it was at first made of an extremely steep bi-concave of a light silicate flint cemented to a meniscus of baryta crown. But, surprising as it may seem in view of all that is required of this central lens, Mr. Dennis Taylor then found that adequate corrections could be obtained by the use of a single bi-concave of light flint glass, a diaphragm being placed immediately behind it. Fig. 38 shows the form adopted for the Cooke lens, Series III., with aperture-ratio $f/6{\cdot}5$.

FIG. 38.—Cooke-Taylor Lens (Series III.).

The final corrections in these lenses are made by adjustment of the separation between the components.

In Mr. Dennis Taylor's second specification, No. 15,107 of 1895, he describes several series of lenses. In these he takes advantage of the new Jena glass, employing for the positive lenses the densest baryta crown (O 1209), having a mean refractive index of 1·6114, while the negative lenses are made of a light silicate or boro-silicate flint, having a mean index of 1·5482 or 1·5679. The use of the high-refractivity crown enables the positive lenses to be made with less steep curves, and the use of the low-refractivity flint enables the correcting negative lens to be made with very steep curves, so compensat-

ing for the other aberrations. Numerical examples[1] are given in the specification, Fig. 9 of which approximately corresponds to the present form of medium wide-angle lens.

Fig. 39 depicts the Cook portrait lens, having aperture-ratio of $f/4{\cdot}5$; the angular field being over 45°. The back glass is adjustable, so as to permit the operator to work either with full definition up to the margins of the plate or to "soften" the detail by re-introducing spherical aberration. By removing the back lens and substituting another of lower power, known as an "extension lens" (Fig. 40), the entire focal length of the combination may be lengthened without sacrificing definition. For process work the Cooke lenses are much prized, on account of their freedom from distortion, as well as for their excellent marginal definition.

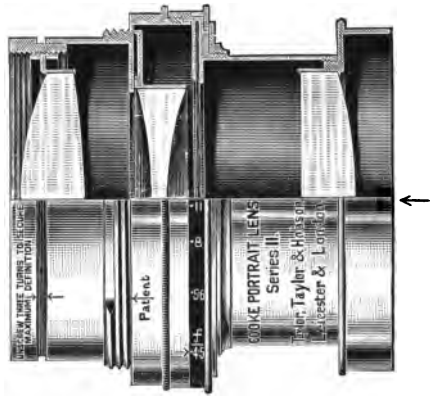

FIG. 39.—Cooke-Taylor Portrait Lens.

FIG. 40.—Cooke-Taylor Extension Lens.

[1] In the recent treatise of Herr von Rohr on Photographic Objectives, he gives aberration curves for many actual lenses of different makers. The curves given for the Cooke lenses are not, however, taken from an actual lens, but from the data of the patent specification only. This, we are informed, is also the case with some of the other lenses there described, which is to be regretted, as, for obvious reasons, patent specifications are seldom accurate in detail.

CHAPTER XIII

TELEPHOTOGRAPHIC LENSES

In recent years a type of lens has been developed for the express purpose of taking photographs of very distant objects. Suppose, for example, there is a widely-extended landscape which includes a castle standing on a hillside five or six miles away. An ordinary landscape lens, even if suitable for making a whole-plate picture 9 inches wide by 7 inches high, though it could take into its field of view a wide stretch of country, could not, if directed towards this castle, produce a picture of it on any but an exceedingly small scale. It must be remembered that the size of the images on a plate is governed by the strict rule of optics that the relative sizes of image and object are in the same proportion as their relative distances from the lens.[1] Now, let us suppose that the landscape lens is one with a focal length of 10 inches: let us see what size it will give to the image of the castle. Suppose the latter to be 100 feet high and 5 miles away. Then the height of the image of the castle on the plate will bear the same proportion to 100 feet as 10 inches bears to 5 miles. It will, in fact, be about $\frac{1}{26}$ of an inch high! The only way to get a large image of that castle from a distance of 5 miles is to employ a lens of longer focal length than 10 inches, or to use something which will optically act as such. Let us apply the same rule to ascertain what focal length would be needed in order to produce an image 3 inches high. The focal length would have to be such that it bears to 5 miles

[1] Or, strictly speaking, are in the same proportion as their distances from the "principal points" of the lens—of which "principal points" more is said later. See p. 128. See also Harris's *Optics*, 1775.

the same proportion as 3 inches does to 100 feet. In fact, it would have to be 64 feet long. Imagine a camera-body 64 feet long!

Let it be remembered that when we are dealing with objects many feet away from the camera, the rule that governs the action of lenses in the case of magnifying glasses and microscopes works in the reverse way. The more powerful the lens—that is, the shorter its focal length—the *less* does it magnify. To produce *larger* pictures of distant objects we must use a *weaker* lens—that is to say, one of longer focus.

Further, when one is using a weak lens of long focus, or its equivalent, the angular width of the field of view will be proportionately contracted.

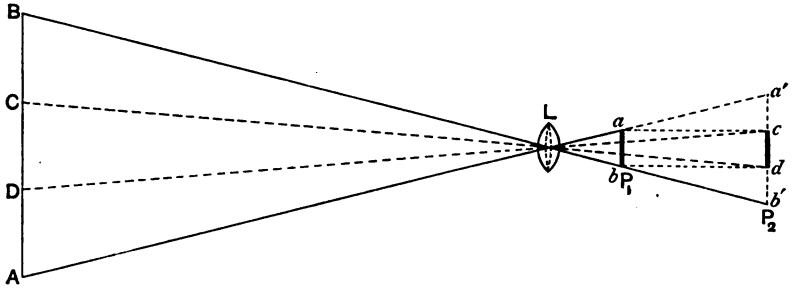

FIG. 41.—Diagram illustrating Relation between Focal Length and Size of Image.

Suppose a distant object AB (Fig. 41) is being photographed through a lens L which has a short focal length, requiring the plate to be put at P_1. Then by drawing the lines B*b* and A*a* through the optical centre of the lens we have marked at *ab* the size of its image on the plate. Now suppose we substitute for the lens another having three times as long a focal length. We must draw back the plate to P_2, three times as far away from L, to get a well-defined image, and it will now be of the size $a'b'$, three times as large as before. Suppose that the size *ab* is the size of our plate, then when we draw it back to the position *cd* it will not be large enough to take in the whole image of AB, but will only take in a part CD one-third as large. In fact, the longer the focal length of our lens, the narrower is, as said above, the angular width of the field of view.

In telephotographic work we are content to deal with fields

of view of very narrow angular width; but to make the images of the distant objects large enough to be of service we must employ a lens-combination such as to act as a very weak long-focus lens.

The problem, therefore, of telephotography consisted in inventing some optical combination which would act as a long-focus lens, and yet not require an impracticably long body to the camera. Not very much invention was required, because the requisite optical system already existed in theory in the telescope itself. Generally, when people use telescopes they use them subjectively, that is to say, put them to their eyes so that they receive the image personally. But there is another way of using a telescope, namely, to let the light that comes out through the eye-piece fall upon a white screen, where it makes a *real* image that can be seen objectively by many people at once. Of course, this requires a darkened room, unless the object is itself very bright. This is—even without a dark room—an excellent way of observing the sun-spots. The writer, when a boy at school more than thirty years ago, used this method to photograph the spots of the sun.

Let us now see how telescope principles may be applied to make a telephotographic lens-system.

Consider a common plano-convex lens A (Fig. 42) capable of bringing a parallel beam to converge to a focus at F. If now a negative lens B of somewhat greater power is introduced

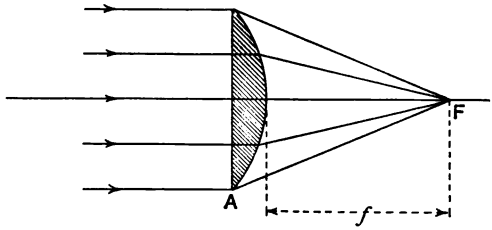

FIG. 42.—Focal Length of Positive Lens.

between the lens A and its focus, as in Fig. 43, it will reduce the amount of convergence, and as in the lower figure, and cause the rays to meet at F′ further away. If these converging rays are produced backwards (as shown by the dotted lines) till they meet the original parallel rays, it will be seen

that the effect of the combination is the same as if, instead of the lenses A and B, there had been used a lens C of less power than A, and as if it had been placed much further away in the

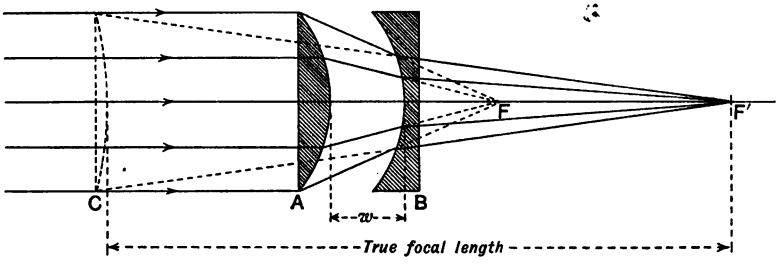

FIG. 43.—Effect of adding a Negative Lens in lengthening the effective Focal Length, and virtually shifting the Lens forward.

direction from which the light enters. All telephotographic combinations are founded on this principle. The simple formula for finding the focal length of the equivalent lens is this:—

Let f_1 be the focal length of the first (positive) lens.

Let f_2 be the focal length of the second (negative) lens.

Let w be the width between the lenses.

Let F be the true focal length of the equivalent lens.

Then

$$F = \frac{f_1 \times f_2}{f_1 + f_2 - w}.$$

A glance at Fig. 43 will show that the distance from the focus F measured to the second lens B is much less than the true focal length. This back distance, sometimes, but incorrectly, called the "back focus" of the combination, is given by the formula

$$BF = \frac{f_2(f_1 - w)}{f_1 + f_2 - w}.$$

From the first of these formulae it is clear that the focal length, and therefore the magnification, depends upon the width by which the lenses are separated. If they were separated by a width w exactly equal to the algebraic sum of their focal lengths $f_1 + f_2$, then the equivalent focal length would become infinitely great, the rays emerging parallel. In

such a case the telescope so adjusted would suit only an eye adjusted for parallel vision. For distinct vision with a normal eye adjusted to see distinctly an object or an image situated at say 12 inches distance, it would be necessary to alter w slightly, so as to make the image a virtual one at that distance from the eye, the telescope being shortened a little, so that w is slightly greater than f_1+f_2. If, however, it is desired that this telescopic arrangement shall project a real image on a screen, the telescope must be drawn out a little, so that w is greater than f_1+f_2. Let us denote this displacement in or out by the symbol d, and let it be reckoned negative when w exceeds f_1+f_2. Then we have

$$f_1+f_2-w=d,$$

and

$$\mathrm{F}=\frac{f_1 f_2}{d}.$$

Suppose, for example, $f_1=8$ inches, and f_2 (the negative lens) is -4 inches. If we put them 4 inches apart, $f_1+f_2=4$; $f_1+f_2-w=d=0$. In this position F = infinity. Now let the back lens be pushed in 1 inch, or $w=5$, and $d=-1$; then since $f_1 f_2=-32$, we have F = 32 inches. Or let the back lens be pulled out 2 inches, then F = 16 inches. In the former case the distance of the camera back from the back lens is 12 inches, in the latter case the back distance is 4 inches. In any case this back distance is considerably less than the true focal length, because the "equivalent planes" of the combination are always displaced toward, or even beyond the front (positive) component. This displacement is more marked when the two lenses are of very unequal power. For example, let $f_1=8$ inches and $f_2=-2$, and let them be put $6\frac{1}{2}$ inches apart. Here $d=f_1+f_2-w=-\frac{1}{2}$ inch, and therefore F = 32 inches, and the back distance works out at 6 inches only. Here is an example of a camera lens, the back focal length of which is only 6 inches, and which is itself only $6\frac{1}{2}$ inches long, but which acts as a lens (so far as magnifying power is concerned) having an equivalent focal length of 32 inches. It will be noted that the focal length can be altered by changing the distance between the two components.

The application of this principle to telescopes, to shorten

FIG. 45.—VIEW OF MÜNCHEN TAKEN WITH ORDINARY LENS AT A DISTANCE OF 2800 METRES.

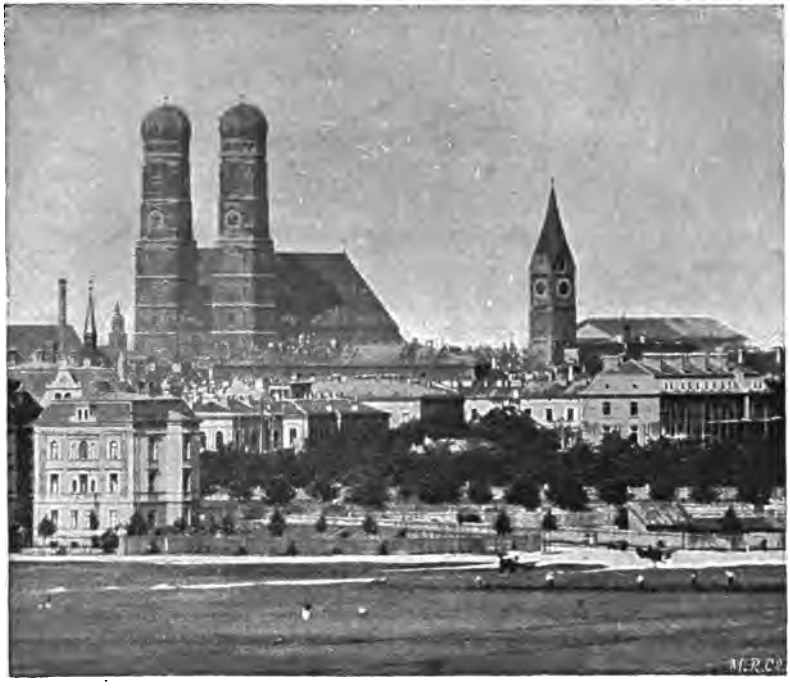

FIG. 46.—VIEW OF MÜNCHEN TAKEN BY MIETHE WITH TELE-OBJECTIVE AT DISTANCE OF 2800 METRES.

their length and give them a variable magnifying power, appears to have been suggested first by Wolf early last century; but to Barlow [1] is due the realisation of this idea by the employment

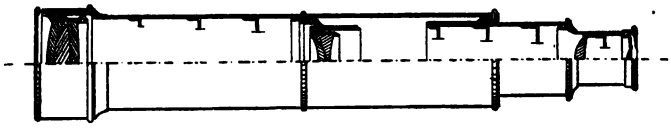

FIG. 44.—Barlow Telescope with Extension Lens in Middle.

of a *negative achromatic lens* to extend the equivalent focal length of the objective. Fig. 44 depicts a modern form of the Barlow telescope on this principle.

Telephotographic lenses were first brought out about the year 1891 by Mr. T. R. Dallmeyer and M. A. Duboscq of Paris independently, and a little later in the same year by Professor A. Miethe, now of Charlottenburg. Suggestions of a more or less definite nature, to lengthen the focus of a positive lens by adding behind it a negative lens, had been made years before by Barlow and by Porro; while Mr. Traill Taylor had suggested the use of an opera-glass (which has a negative eye-piece) as an enlarging lens. But for telephotographic work the opera-glass is not adapted. It does not give a good flat field, and the negative lenses are not of sufficiently large aperture to be effective. Mr. T. R. Dallmeyer has recently published an extensive work [2] on telephotography, dealing with the whole subject, and particularly the use of these lenses in portraiture. For photographing distant objects the telephotographic objective has the great advantage, over the equivalent lens of ordinary construction, that one may produce large images without having the very great and unwieldy camera length that these would require. Fig. 45 shows a view of München taken by Professor Miethe at a

[1] See Dollond and Barlow, *Phil. Trans.* 1834; also Dawes, *Astron. Soc. Notices*, vol. x. p. 175.

[2] *Telephotography*, by T. R. Dallmeyer: London, W. Heinemann, 1899. To the courtesy of the author of this book is due the permission to reproduce Figs. 43 and 47. Mr. Dallmeyer had previously read papers on the same subject at the Camera Club, London, on 10th December 1891 and 10th March 1892. Amongst other literature on this topic may be mentioned a monograph on the use of photographic tele-objectives by Dr. P. Rudolph, issued by the firm of Zeiss of Jena in 1896.

distance of 2800 metres (over $1\frac{1}{2}$ mile) with an ordinary objective, a Steinheil's *Group-Antiplanet*, of 10-inch focal length; and Fig. 46 is a view, taken *at the same distance* with a tele-objective, of part of Fig. 45. The camera length was 2 feet 4 inches; but the equivalent focal length was 8 feet! The exposure was 3 seconds. For mountain photography, and for landscapes taken from balloons for topographical purposes, the tele-objective is peculiarly adapted.

Mr. Dallmeyer's first construction consisted of a single cemented positive of wide aperture-ratio combined with a single cemented negative lens, with a diaphragm between. But, owing to the presence of a slight distortion, he modified the construction, and now uses as the front positive component a *Stigmatic* portrait lens of aperture-ratio $f/4$ or $f/6$,

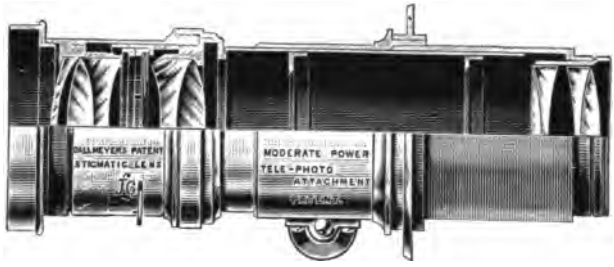

FIG. 47.—Dallmeyer's Tele-objective.

adapted to a tube with rack-work, and as a negative back component a double combination negative element. This is illustrated in Fig. 47. At first, for the sake of getting high magnification (which depends on the ratio of f_1 to f_2), it was thought advisable to have the negative lens of focal length f_2 several times shorter than f_1, that of the positive component. But now the usual practice is to make f_2 about half f_1. When viewing very distant objects it is necessary to rack forward the front lens so that d may be very small; and to correct for the altered spherical aberration, it is also advisable slightly to unscrew the hinder element of the portrait lens.

Professor Miethe employs usually a *Collinear* positive combined with a triple-cemented negative.

Steinheil also uses a triple-cemented negative in combination with a *Group-Antiplanet* (p. 61).

Messrs. Zeiss use for portraiture a single positive component made up of four glasses cemented together, and having an aperture-ratio of about $f/3$. For all cases in which distortion is inadmissible they substitute a double anastigmat. In either case the negative component is a cemented triple with one face flat. It is provided with a rack and an engraved scale, with an index, in order to read off the amount of the optical displacement d, in order to calculate the equivalent focal length.

The second or negative lens used in the tele-objective should be itself achromatic, and should be preferably also corrected for central spherical aberration. It should therefore consist of two cemented lenses; the principal or negative one being that with lower refractive index and higher ν, the positive correcting part being of a higher refractive index and lower ν. The difference of the two refractivities affords the means for correcting spherical aberration, the difference of the two ν-values the means for achromatising. This can be done with old kinds of glass, but only by use of relatively steep curves. Rudolph has, however, shown[1] that, by the application of anomalous pairs of glass having very nearly equal refractivity, more favourable curvatures can be used. Accordingly, in such lenses Zeiss uses a dense baryta crown for the negative glass, and a silicate crown of high dispersion for the positive correcting part that is cemented to it to form an achromatic negative lens, the spherical aberration being under-corrected.

The advantage of the telephotographic lens in portrait work appears to be that, with a telephotographic lens of the same equivalent focus, the camera may be placed further off, has a better perspective effect, and enjoys a greater "depth" of focus, while producing pictures of the same size. In practice any non-distorting doublet lens, stigmatic, anastigmatic, or rapid rectilinear, may be used as the positive component of a tele-objective.

Following out the plan of the telephotographic lens, Mr. Dallmeyer has, in conjunction with Mr. Bergheim, produced an exceedingly interesting portrait lens consisting of a single *uncorrected* positive lens combined with a single *uncorrected*

[1] British Patent No. 10,000 of 1893; or *British Journal of Photography*, xl. p. 659 (1893).

negative lens of larger diameter placed some distance behind it. A stop is employed in front of the front lens. The positive lens has a high aperture-ratio, and the combination is free from distortion; but the spherical aberration that is present prevents fine definition in the picture, and gives images with softened outlines, having certain artistic qualities that are not unpleasing.

APPENDIX I

SEIDEL'S THEORY OF THE FIVE ABERRATIONS

So much is said in Chapter II. about Seidel's theory, and so little beyond a general outline is actually given, that for the benefit of readers who may wish to go more deeply into the subject some further account of this theory is here appended.

Ludwig von Seidel, who was Professor of Mathematics in Munich (died 1896), contributed to the *Astronomische Nachrichten* a number of mathematical papers on the theory of lenses, the chief of them appearing in Nos. 835, 871, 1027, 1028, and 1029 of that journal. The paper which deals with aberrations and their annulment is to be found in Nos. 1027 to 1029, published April 1855. Its title is "Zur Dioptrik," with a second title, "On the Development of the Members of the third Order which determine the path through a system of refracting media of a ray of light lying out of the plane of the axis." The paper is long and intricate, the mathematical expressions obtained being for the most part very complicated. As stated in Chapter II., the method of procedure is to obtain trigonometrical expressions for the path of the rays which traverse the optical system at different angles, then to develop these trigonometrical expressions in series of ascending powers, and then, neglecting all powers above the third order for the sake of simplicity, to deduce from the expressions the conditions which will lead to the annulment of the several aberrations. As explained in the text in Chapter II., these conditions are found to be expressed as five different sums, which are, in fact, the coefficients of the various terms in the equations, each sum needing to be reduced in turn to zero if the corresponding aberration is to be eliminated. Thus are obtained the five *equations of condition* enumerated in Chapter II.

Von Seidel has himself given a non-mathematical account of the matter in vol. i. of the *Reports of the Scientific Technical Commission of the Royal Bavarian Academy of Sciences*, p. 227, 1866. More recently S. Finsterwalder has furnished a *résumé* of von Seidel's equations, and has drawn certain further consequences from them. From these two sources, and from Professor Lummer's edition of Müller-Pouillet's *Optics*, the following account of von Seidel's theory has been compiled.

In von Seidel's investigation he adopted a notation which, if convenient, is also unusual. Every centred optical system consists of a number of

spherical surfaces which are the boundaries between media of different refractivities. Seidel uses *even* suffixes to denote quantities relating to the refracting surfaces, and *odd* suffixes to denote quantities relating to the intervening media. His zero is reckoned at the first refracting surface, the radii of curvatures of the successive surfaces being called $\rho_0, \rho_2, \rho_4 \ldots$ etc., the last one being called ρ_{2i}, where i denotes half the total number of such surfaces. Similarly, the set of successive refractive indices are n_{-1}, n_1, n_{-3}, n_3 etc., up to n_{2i+1}. Distances, real or virtual, of points of intersection of rays with the axis, being reckoned from the respective surfaces, will be denoted with even suffixes; while quantities that belong to the intervening media, such as their thicknesses, and the inclinations of rays traversing them, will be denoted with odd suffixes. The order followed in the notation is that followed physically by the incident rays, and most conveniently taken from left to right. Radii and distances of intersections of rays, both of which are measured from the vertices of the corresponding refracting surfaces, are considered positive when measured in this direction from left to right.

Any centred dioptric system will then be characterised by its ordinary data—ρ the radii of curvature, d the thicknesses of the respective media, and n their refractive indices; so that, adopting the suffix notation just explained, the whole of the given elements of the system are situated in the following order:—

$$n_{-1}, \rho_0, n_1, d_1, \rho_2, n_3, d_3, \rho_4 \ldots n_{2i-1}, d_{2i-1}, \rho_{2i}, n_{2i+1}.$$

For these ordinary data von Seidel now substitutes with great success certain new ones relating to what he calls "normal rays," meaning by the term "normal ray" one which, starting from a point in the optical axis, and continually making indefinitely small angles therewith, passes through the system.

These new data are the lateral distances h_{2i} from the axis at which the normal ray intersects the respective refracting surfaces, and the angles σ_{2i+1} which it makes with the axis in traversing the successive individual media, and any finite multiples of these quantities, since both are small.

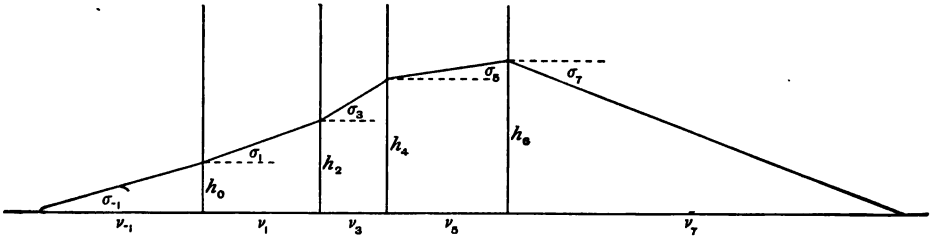

FIG. 48.—Path of a Ray through Optical System.

Let us consider the accompanying Fig. 48, in which the path of a normal ray through a system of four refracting surfaces, the angles being exaggerated, however, for clearness. Then, since for small angles the tangent may be taken as equal to the arc, the quotient h_0/σ_{-1} gives the

distance of the starting-point from the vertex of the first refracting surface. Further, instead of writing the refractive indices n_{2i+1}, it is more convenient to introduce their respective reciprocals[1] with the symbol ν_{2i+1}. So then the magnitudes h, σ, ν will serve to determine the optical system just as well as the original ρ, d, and n. The following set of equations will serve to convert from one set of symbols to the other :—

$$\left.\begin{aligned} d_{2i+1} &= \frac{h_{2i} - h_{2i+2}}{\sigma_{2i+1}}; \\ n_{2i+1} &= \frac{1}{\nu_{2i+1}}; \\ \mathrm{N}_{2i} &= \nu_{2i-1} - \nu_{2i+1}; \\ \rho_{2i} &= \frac{\mathrm{N}_{2i} h_{2i}}{\nu_{2i-1}\sigma_{2i+1} - \nu_{2i+1}\sigma_{2i-1}} \end{aligned}\right\} \quad . \quad . \quad [1].$$

Or to convert back from ρ, d, n, to h, σ, ν, the following algorithm given by von Siedel may be used :—

"First form the constants a_0, a_1, a_2, etc., according to the equations

$$a_{2i} = -\frac{n_{2i-1} - n_{2i+1}}{\rho_{2i}} = +n_{2i-1}n_{2i+1}\frac{\mathrm{N}_{2i}}{\rho_{2i}}$$

$$a_{2i+1} = -\frac{d_{2i+1}}{n_{2i+1}};$$

then choose h_0 and σ_{-1} so that h_0/σ_{-1} is equal to the distance of the starting-point of the normal ray from the vertex of the first refracting surface; then take $\kappa_{-1} = n_{-1}\sigma_{-1}$, $\kappa_0 = h_0$, and calculate with these initial values all the later κ, according to the equation $\kappa_{m+1} = a_m\kappa_m + \kappa_{m-1}$; then one has in general

$$h_{2i} = \kappa_{2i}$$

$$\sigma_{2i+1} = \frac{\kappa_{2i+1}}{n_{2i+1}}."$$

The effect of introducing into the calculations these successive "determining quantities" h and σ, instead of following the plan of reckoning by intermediate virtual focal lengths, is to free the calculations from the unmanageable continued fractions which would otherwise occur.

Next, in order to determine the position of a ray before refraction, von Seidel chooses the two pairs of co-ordinates $\eta_{-1}\ \zeta_{-1}$, $\eta'_{-1}\ \zeta'_{-1}$ of the points in which the ray meets two fixed planes A_{-1} and B_{-1} perpendicular to the axis of the system, and in a similar fashion the refracted ray is referred to co-ordinates in two planes A_1 and B_1 in the second medium, and so forth to the two final planes A_{2i+1} and B_{2i+1} in the $(2i+1)$th medium. The planes $\mathrm{A}_1\ \mathrm{B}_1 \ldots \mathrm{A}_{2i+1}\ \mathrm{B}_{2i+1}$ should, however, be dependent in some known way upon the planes of origin $\mathrm{A}_{-1}\ \mathrm{B}_{-1}$; they should, in fact, be situated where, according to the approximation

[1] It will be noted here that von Seidel uses the symbol ν in a different sense from that assigned to the symbol ν (the achromatic refractivity) in Chapter VIII.

formulae of Gauss, the images, real or virtual, of the planes A_{-1} and B_{-1} are situated in the corresponding media.

The purpose for which *two* sets of planes are chosen is the following: The A set are supposed to represent the focal planes for the object and its successive images after the several successive refractions. The B set are the diaphragmatic planes—that is to say, the planes of the diaphragm and its several successive images. [In Abbe's method of treating entrance- and exit-pupils, the positions of these and of the diaphragm would lie in some of the planes of the B series.]

Let us consider a normal ray,[1] defined by its determining values h, σ, which passes through the point where the axis intersects the plane A_{-1}; then, as already mentioned, $\frac{h_0}{\sigma_{-1}}$ is the distance of the plane A_{-1} from the vertex of the first refracting surface; $\frac{h_0}{\sigma_1}$ the distance of the plane A_1 from the same surface; $\frac{h_2}{\sigma_1}$ the distance of the plane A_1 from the second refracting surface; and so on. If now one introduces the consideration of a second normal ray which passes through the intersection of the plane B_{-1} with the axis, and which is specified by the "determining quantities" h', σ', then the distances of the B series of planes may be expressed in a similar way. The distance between the planes A_{2i+1} and B_{2i+1} is then

$$\frac{h_{2i}}{\sigma_{2i+1}} - \frac{h'_{2i}}{\sigma'_{2i+1}} = \frac{h_{2i+2}}{\sigma_{2i+1}} - \frac{h'_{2i+2}}{\sigma'_{2i+1}}.$$

The quantities h, σ and h', σ' are, of course, not independent of each other, for they both originated from the original ρ and d. Whence there results equality between the following expressions:—

$$\frac{h_0\sigma'_{-1} - h'_0\sigma_{-1}}{\nu_{-1}} = \frac{h_0\sigma'_1 - h'_0\sigma_1}{\nu_1} = \frac{h_2\sigma'_1 - h'_2\sigma_1}{\nu_1} = \frac{h_2\sigma'_3 - h'\sigma_3}{\nu_3} = \ldots = \mathrm{T} \qquad [2].$$

Let us now write, for brevity, some additional conventions:—

$$\frac{h'_0}{h_0} = \chi;$$

$$\nu_{2i-1} + \nu_{2i+1} = 2\mu_{2i};$$

$$\sum_{p=1}^{i} = \sum_{p=1}^{p=i} \frac{\nu_{2p-1} d_{2p-1}}{h_{2p-2} h_{2p}}.$$

Then by the introduction of the quantity T above, and these new conventions, one may express the dependence of h' and σ' on h and σ in the following formulae:—

---

[1] By the term "normal ray" must be understood one that actually intersects the axis at *some* point, so that its path lies wholly in a meridional plane drawn through the axis similar to the ray drawn in the plane of the paper in Fig. 47 *supra*.

$$\left.\begin{aligned}
\sigma'_{2i-1}-\sigma'_{2i+1}&=(\sigma_{2i-1}-\sigma_{2i+1})(\chi-\overset{i}{\mathrm{T}\Sigma})+\frac{\mathrm{TN}_{2i}}{h_{2i}}\ ;\\
\nu_{2i-1}\sigma'_{2i-1}-\nu_{2i+1}\sigma'_{2i+1}&=(\nu_{2i-1}\sigma_{2i-1}-\nu_{2i+1}\sigma_{2i+1})(\chi-\overset{i}{\mathrm{T}\Sigma})+\\
&\qquad\frac{2\mathrm{TN}_{2i}\mu_{2i}}{h_{2i}}\ ;\ldots\\
\nu_{2i-1}\sigma'_{2i+1}-\nu_{2i+1}\sigma'_{2i-1}&=(\nu_{2i-1}\sigma_{2i+1}-\nu_{2i+1}\sigma_{2i-1})(\chi-\overset{i}{\mathrm{T}\Sigma})\ ;\\
h'_{2i}&=h_{2i}(\chi-\overset{i}{\mathrm{T}\Sigma}).
\end{aligned}\right\}\quad[3].$$

In the case when $i=o$ the sums Σ on the right vanish (see *Astronomische Nachrichten*, No. 1028, p. 315).

In selecting the co-ordinates of which one makes use in fixing (in the various planes of the A and B series) the points in which these planes are intersected by the rays, one may either choose the rectangular co-ordinates η_{2i+1}, ζ_{2i+1}, η'_{2i+1}, ζ'_{2i+1}, which are parallel to one another and have their origins in the points of intersection of the several planes with the optic axis, or else one may choose the polar co-ordinates r_{2i+1}, v_{2i+1}, r'_{2i+1}, v'_{2i+1}, whose poles lie on the optic axis, and whose angles are reckoned by parallel straight lines. Then the requirement of collinear formation of images, in accordance with the usual dioptric formulae of approximation (*i.e.* Gauss's theory)—that is to say, that the areas mapped out in the planes of the A series by themselves, or in the planes of the B series by themselves, by the intersection of any rays traversing the optic system, shall be *similar* to one another—is expressed simply by the proportionality of the linear co-ordinates. The letters $\eta\ \zeta,\ \eta'\ \zeta',\ r\ v,\ r'\ v'$ may be used to denote the values, resulting from the dioptric approximation formulae, of the co-ordinates of the traces of a ray intersecting the A and B planes; their proportionality can then be expressed according to the known relation between the size of the image and the convergence of the rays in the following formulae:—

$$\left.\begin{aligned}
\frac{\sigma_{-1}}{\nu_{-1}}\eta_{-1}&=\frac{\sigma_1}{\nu_1}\eta_1=\frac{\sigma_3}{\nu_3}\eta_3=\ \ldots\ \mathrm{H}\\
\frac{\sigma'_{-1}}{\nu_{-1}}\eta'_{-1}&=\frac{\sigma'_1}{\nu_1}\eta'_1=\frac{\sigma'_3}{\nu_3}\eta'_3=\ \ldots\ \mathrm{H}'\\
\frac{\sigma_{-1}}{\nu_{-1}}\zeta_{-1}&=\frac{\sigma_1}{\nu_1}\zeta_1=\frac{\sigma_3}{\nu_3}\zeta_3=\ \ldots\ \mathrm{Z}\\
\frac{\sigma'_{-1}}{\nu_{-1}}\zeta'_{-1}&=\frac{\sigma'_1}{\nu_1}\zeta'_1=\frac{\sigma'_3}{\nu_3}\zeta'_3=\ \ldots\ \mathrm{Z}'\\
\frac{\sigma_{-1}}{\nu_{-1}}r_{-1}&=\frac{\sigma_1}{\nu_1}r_1=\frac{\sigma_3}{\nu_3}r_3=\ \ldots\ \mathrm{R}\\
\frac{\sigma'_{-1}}{\nu_{-1}}r'_{-1}&=\frac{\sigma'_1}{\nu_1}r'_1=\frac{\sigma'_3}{\nu_3}r'_3=\ \ldots\ \mathrm{R}'
\end{aligned}\right\}\quad[4a].$$

The magnitudes H, Z, R, and H', Z', R', may be termed the reduced co-ordinates of the points of intersection of the rays with the planes. Further, one may consider the co-ordinates $\eta,\ \zeta,\ r$ and $\eta',\ \zeta',\ r'$ as being measured in their several planes by units of measurement conveniently chosen, so that in particular the same numerical measures for the co-

ordinates of the traces of a given ray may be found, on the one hand, for the A planes, and, on the other, for the B planes. The departures of the values of the co-ordinates of the *actual* points of intersection from those thus approximately arrived at, departures which constitute aberrations of the rays, may be expressed by

$$\left.\begin{array}{l}\Delta\eta_{2i+1},\ \Delta\zeta_{2i+1},\ \Delta r_{2i+1},\ \Delta v_{2i+1},\\ \Delta\eta'_{2i+1},\ \Delta\zeta'_{2i+1},\ \Delta r'_{2i+1},\ \Delta v'_{2i+1};\end{array}\right\}$$

and these measured in terms of the reduced units—so far as they are linear—by

$$\left.\begin{array}{l}\Delta H_{2i+1},\ \Delta Z_{2i+1},\ \Delta R_{2i+1},\\ \Delta H'_{2i+1},\ \Delta Z'_{2i+1},\ \Delta R'_{2i+1}.\end{array}\right\}$$

Then we have, for example,

$$\left.\begin{array}{l}\frac{\nu_{2i+1}}{\sigma_{2i+1}}(H+\Delta H_{2i+1}) = \eta_{2i+1}+\Delta\eta_{2i+1}\\ \frac{\nu_{2i+1}}{\sigma'_{2i+1}}(H'+\Delta H'_{2i+1}) = \eta'_{2i+1}+\Delta\eta'_{2i+1}\\ \frac{\nu_{2i+1}}{\sigma_{2i+1}}(R+\Delta R_{2i+1}) = r_{2i+1}+\Delta r_{2i+1}\end{array}\right\} \quad . \quad [4b].$$

and so forth.

These aberrations ΔH_{2i+1} . . . may be regarded as correcting terms relatively to the values of the determining quantities H, Z, H', and Z' of a ray that follows the ideal path in conformity with the approximation formulae. In proceeding with the calculation of these correcting terms one at once discovers a great advantage which lies in the ingenious choice made by von Seidel of these four determining quantities—namely, that the expression for the correcting term of any one of them, so far as it relates to any single refraction, does not depend upon the *four* correcting terms of the previous refraction, but only upon *one* of them, and contains only the approximate values of the remaining members.

To simplify the notation, all the magnitudes relating to the ray and to the medium prior to $2i$th refraction, and which should strictly be distinguished by the index $2i-1$, may be marked by *minus* signs placed under the corresponding letters, and in a similar way those magnitudes as altered after undergoing the $2i$th refraction may be indicated by *plus* signs written under them in lieu of the index $2i+1$. Then the reduced polar co-ordinates of the traces of the ray in the A and B planes become :—

In the planes	A	B
before the refraction	$R+\Delta R,\ v+\Delta v$	$R'+\Delta R',\ v'+\Delta v'$
and in the planes	A	B
after the refraction	$R+\Delta R,\ v+\Delta v$	$R'+\Delta R',\ v'+\Delta v'$

The difference $\underset{+}{\Delta R} - \underset{-}{\Delta R}$ or $\underset{+}{\Delta v} - \underset{-}{\Delta v}$ of the correcting terms is to be added, before or after the refraction as the case may be, to the constant reduced co-ordinates R, v.

So far all has been preparatory, explaining the notations, abbreviations, and conventions by which von Seidel was enabled to handle the highly complicated relations between the various quantities. We shall now see how he applied them in the trigonometrical calculations of the aberrations.

The differences $\underset{+}{\Delta R} - \underset{-}{\Delta R}$, and $\underset{+}{\Delta v} - \underset{-}{\Delta v}$ of the correcting terms, which are, in fact, the co-ordinate elements that go to make up the aberrations of the individual rays, are then expressed by Seidel in the following formulae, which he develops at length from the ordinary trigonometrical expressions, neglecting the higher terms. They are accurate up to terms of the fifth order of the co-ordinates, supposed to be small quantities of the first order :—

Order of the co-ordinates supposed infinitely small of the first order—

$$2T^3\left(\underset{+}{\Delta R} - \underset{-}{\Delta R}\right) = R'^3 \cos(v'-v) h \left(\frac{\sigma - \sigma}{\underset{-}{} \quad \underset{+}{}}\right)^2 (\nu\sigma - \nu\sigma) \quad \text{I.}$$

$$- R'^2 R (1 + 2\cos^2(v'-v)) h \frac{(\sigma-\sigma)(\sigma'-\sigma')}{N N} (\nu\sigma - \nu\sigma) \quad \text{II.}$$

$$+ R'R^2 \cos(v'-v) \begin{cases} 2h \left(\frac{\sigma'-\sigma'}{\underset{-}{} \quad \underset{+}{}}\right)^2 (\nu\sigma - \nu\sigma) & \text{IIIa.} \\ + h \frac{(\sigma-\sigma)(\sigma'-\sigma')}{N N} (\nu\sigma' - \nu\sigma') & \text{IIIb.} \\ + \frac{T}{N} (\sigma - \sigma)(\nu\sigma' - \nu\sigma') & \text{IIIc.} \end{cases}$$

$$- R^3 \left[h \left(\frac{\sigma'-\sigma'}{\underset{-}{} \quad \underset{+}{}}\right)^2 (\nu\sigma' - \nu\sigma') + \frac{T}{N} (\sigma' - \sigma')(\nu\sigma' - \nu\sigma') \right] \quad \text{IV.}$$

$$2T^3 R \left(\underset{+}{\Delta v} - \underset{-}{\Delta v}\right) = R' \sin(v'-v) \times \text{all the following :—}$$

$$R'^2 h \left(\frac{\sigma - \sigma}{\underset{-}{} \quad \underset{+}{}}\right)^2 (\nu\sigma - \nu\sigma) \quad \text{V.}$$

$$- 2R'R \cos(v'-v) h \frac{(\sigma-\sigma)(\sigma'-\sigma')}{N N} (\nu\sigma - \nu\sigma) \quad \text{VI.}$$

$$+ R^2 \left[h \frac{(\sigma-\sigma)(\sigma'-\sigma')}{N N} (\nu\sigma' - \nu\sigma') + \frac{T}{N} (\sigma - \sigma)(\nu\sigma' - \nu\sigma') \right] \quad \text{VII.}$$

The corresponding formulae for $\underset{+}{\Delta R'} - \underset{-}{\Delta R'}$ and $\underset{+}{\Delta v'} - \underset{-}{\Delta v'}$ are deduced from the above by making the following substitutions :—

R′	and	ΔR′	for R	and	ΔR
v'	and	$\Delta v'$	for v	and	Δv
h'			for h		
σ'	and	σ'	for σ	and	σ
+		−	+		−
− T			for T.		

If we assume now that the dioptric system has $k+1$ refracting surfaces numbered 0, 2, 4, . . . $2k$, we can write the above formulae $2k+1$ times after each other, and each time put, in place of the plus and minus signs under the letters, the indices $2i+1$, $2i-1$ of the media following and preceding the $2i$th refraction, and further provide the unmarked letters h and N (T, R, R′, v, and v' remain constant through all the refractions) with the appropriate indices of the refracting surfaces. Further, if the object-points are supposed to lie in the first plane of the A series, we can take ΔR Δv equal to zero. If we then add the right and left sides of the $k+1$ equations together, there remains on the right-hand side merely $2T^s\Delta R_{2k+1}$ in the one case and $2T^s R\Delta v_{2k+1}$ in the other; that is, there remain only the reduced aberrations of the co-ordinates of the ideal approximate co-ordinates of the trace of the ray where it intersects the last plane of the series. The actual longitudinal aberrations are obtained from the reduced aberrations by multiplication with $\frac{\nu_{2k+1}}{\sigma_{2k+1}}$. On the left-hand side, after the addition, we find again the common factors of the simple formulae built up from the reduced approximate co-ordinates. We then find that, in place of the parts that vary from refraction to refraction, there enter only sums of $2k+1$ terms, the common terms of which are easily formed from the expressions I. to VII., indicated above, by simply replacing ν, ν, σ, σ, σ', σ', h, N by ν_{2i-1}, ν_{2i+1}, σ_{2i-1}, σ_{2i+1}, σ'_{2i-1}, σ'_{2i+1}, h_{2i}, N_{2i}.

Although the formulae so obtained are already very suitable for the calculation of the *modus operandi* of a given optical system, yet the circumstance that the original determining quantities—the ρ and d—of the system to be investigated are contained both in the quantities denominated by h and σ and in those denominated by h' and σ' creates some difficulty in answering the question as to the designing of a system of prescribed performance. By means of the relation already obtained in equation (3) between $h\,\sigma$ and $h'\,\sigma'$, the latter can, however, be eliminated, with the result that *the performance of a dioptric system then appears actually expressed in a single series of determining quantities.* In this way von Seidel obtained the following system of formulae :—

Write first, for brevity,

$$U_{2i} = \frac{N_{2i}}{h_{2i}(\sigma_{2i-1} - \sigma_{2i+1})} - \sum_{p=i}^{p=i} \frac{\nu_{2p-1} d_{2p-1}}{h_{2p-2} h_{2p}};$$

we may collect into the five following sums those expressions which recur in the final formulae, and which in reality govern the several different features of the general aberrations due to form :—

$$\left.\begin{aligned}
S(1) &= \sum_{i=o}^{i=k}(1) = \sum_{i=o}^{i=k} h_{2i}\left(\frac{\sigma_{2i-1}-\sigma_{2i+1}}{N_{2i}}\right)^2 (\nu_{2i-1}\sigma_{2i-1} - \nu_{2i+1}\sigma_{2i+1}) \\
S(2) &= \sum_{i=o}^{i=k}(2) = \sum_{i=o}^{i=k}(1)U_{2i} \\
S(3) &= \sum_{i=o}^{i=k}(3) = \sum_{i=o}^{i=k}(2)U_{2i} \\
S(4) &= \sum_{i=o}^{i=k}(4) = \sum_{i=o}^{i=k}\left((3) - \frac{N_{2i}}{\rho_{2i}}\right) \\
S(5) &= \sum_{i=o}^{i=k}(5) = \sum_{i=o}^{i=k}(4)U_{2i}
\end{aligned}\right\}. \quad [5].$$

These are von Seidel's famous five sums so frequently referred to, and explained generally in Chapter II. As just mentioned, they recur in the final formulae, which, as given by Finsterwalder, are again five in number, as follows :—

$$A = \frac{S(1)}{2T^3}$$

$$B = \frac{\chi S(1) + TS(2)}{2T^3}$$

$$C = \frac{3\chi^2 S(1) + 6\chi TS(2) + 2T^2 S(3) + T^2 S(4)}{2T^3}$$

$$D = \frac{\chi^3 S(1) + 3\chi^2 TS(2) + 2\chi T^2 S(3) + \chi T^2 S(4) + T^3 S(5)}{2T^3}$$

$$E = \frac{\chi^2 S(1) + 2\chi TS(2) + T^2 S(4)}{2T^3}.$$

And, by the aid of these, the reduced aberrations of the polar co-ordinates of the traces of the ray in the last plane may be written :—

$$\Delta R_{2k+1} = AR'^3\cos(v'-v) - BR'^2R\left[1 + 2\cos^2(v'-v)\right] + CR'R^2\cos(v'-v) - DR^3;$$
$$R\Delta v_{2k+1} = R'\sin(v'-v)\left\{AR'^2 - 2BRR'\cos(v'-v) + ER^2\right\}.$$

The plane A_{-1} in the first medium was by hypothesis coincident with the object. The plane B_{-1} in the first medium may be considered as situated at the place where the front stop (if such exists) is set to limit the incident rays, or where the front mounting of the lens acts as a stop. Or if that which limits the working aperture is a stop in one of the other media, then the plane B_{-1} must be taken at that place where (by Gauss's theory) the image of the real stop would be found in the first medium. Then, on the one hand, the magnitude R depends upon the distance of a point-object from the optic axis, or in other words, upon the width of the field of view coming into action. On the other hand, the magnitude R' depends upon the place where the incident ray in traversing the system meets the plane of the stop ; and therefore, if one

considers the extreme rays which are admitted by the aperture of the diaphragm, R′ depends upon the amount of the effective aperture of the system. These Seidel formulae are therefore competent to deal with any given centred optical system as to its performance in any cases that may be presented of prescribed width of field or size of aperture.

As was pointed out in Chapter II., the five sums have the following physical properties :—

If $S(1) = 0$ *there will be no spherical aberration* at the centre of the field. It is equivalent to satisfying Euler's condition for the removal of central aberration.

If this is done, and $S(2) = 0$, then *there will be no coma.* The fulfilment of this second reduction to zero is equivalent to satisfying Frauenhofer's condition or Abbe's sine-condition.

If both these are done, and further, $S(3) = 0$, then *there will be no astigmatism of oblique pencils.* The fulfilment of this third reduction to zero still leaves the image-surface curved.

If, the first three conditions being achieved, we make also $S(4) = 0$, then *there will be no curvature of the plane of the image.* The fulfilment of the fourth reduction to zero is equivalent to satisfying Petzval's condition. It effects the anastigmatic flattening of the image, which, however, may still suffer from unequal magnification toward the margins ; or in other words, there may still be distortion.

If, the first four conditions being realised, we have also $S(5) = 0$, then *there will be no distortion.* So that if all five conditions are fulfilled the optical system will give a perfectly defined, stigmatically perfect, flat, distortionless, truly collinear image of a flat object.

In the memoir of Finsterwalder chiefly used in preparing this summary are given the actual numerical values of the five sums for the cases of the celebrated Heliometer objective of Frauenhofer, which will serve as a simple example of the theory. This lens is an uncemented achromatic system of one flint and one crown glass, supposed to be perfectly corrected for spherical aberration in the axis, for yellow light. The radii of curvature of its surfaces, and the thicknesses of its successive parts, are as follows :—

$$\rho_0 = +838{\cdot}164$$
$$\rho_2 = -333{\cdot}768$$
$$\rho_4 = -340{\cdot}326$$
$$\rho_6 = -1168{\cdot}926$$
$$d_1 = 6{\cdot}0$$
$$d_3 = 0{\cdot}0$$
$$d_5 = 4{\cdot}0$$

Diameter of aperture is 70·2. The distance of the principal focus from the vertex of the last surface is 1126·70. The true focal length is 1131·45. These values are in old Bavarian "lines"; and as the Bavarian foot (of 144 lines) is equal to 0·292 metre, it follows that the true focal length is 2286 millimetres.

The values of the reciprocals of the refractive indices (for yellow light) are :—

$$\begin{aligned} \nu_{-1} &= 1{\cdot}0 \\ \nu_1 &= 0{\cdot}653967 \\ \nu_3 &= 1{\cdot}0 \\ \nu_5 &= 0{\cdot}610083 \\ \nu_7 &= 1{\cdot}0 \end{aligned}$$

From these may be deduced the following values for the quantities h and σ, which are the "determining quantities" (see p. 105 above):

$$\begin{aligned} h_0 &= 100{\cdot}00 \\ h_2 &= 99{\cdot}7523 \\ h_4 &= 99{\cdot}7523 \\ h_6 &= 99{\cdot}6696 \\ \sigma_{-1} &= 0{\cdot}0 \\ \sigma_1 &= 0{\cdot}041285 \\ \sigma_3 &= 0{\cdot}221270 \\ \sigma_5 &= 0{\cdot}020675 \\ \sigma_7 &= 0{\cdot}088382 \end{aligned}$$

From these there may be deduced the values of the five sums, the separate totals of the positive and negative terms being given, as well as their net totals:—

$$\begin{aligned} S(1) &= -5{\cdot}50853 + 5{\cdot}50874 = +0{\cdot}00021 \\ S(2) &= -0{\cdot}11198 + 0{\cdot}108383 = -0{\cdot}003597 \\ S(3) &= -0{\cdot}00288 + 0{\cdot}0020082 = -0{\cdot}0008718 \\ S(4) &= -0{\cdot}0046632 + 0{\cdot}0931744 = -0{\cdot}0014888 \\ S(5) &= -0{\cdot}00011635 + 0{\cdot}00011783 = +0{\cdot}00000148 \end{aligned}$$

From these figures it appears that in this lens the compensation for central aberration, the compensation of the positive term by the negative, is correct to within 4 per cent of the value of the former; while the residual errors of S(2) and S(5) are an even smaller percentage. The smallness of S(5) is presumably due to the small thickness of the component lenses. Frauenhofer had purposely designed the lens to correct for coma, and the smallness of S(2) is the measure of his success. This lens had a very narrow field of view, its angular semi-width being only 48′.

In a later paper by von Seidel, written in 1881, but published posthumously in 1898,[1] he reviews the equations of the earlier theory; he gives additional expressions for the radial and tangential aberrations in the image-plane; and also re-states some of the equations, using rectilinear co-ordinates x and y in place of the polar co-ordinates of the earlier paper, x standing for $R' \cos(v' - v)$ and y for $R' \sin(v' - v)$. He also shows that Frauenhofer's condition for simultaneous removal of central aberration and of coma may be more simply written

$$B = \chi S(1) + T S(2) = 0.$$

[1] "Ueber die Bedingungen möglichst präcizer Abbildung durch einen dioptrischen Apparat" (edited by S. Finsterwalder), *Sitzungsberichte der k. bayr. Akademie*, 1898, p. 395.

Finsterwalder, who in 1892 published a remarkable memoir [1] upon the images produced by optical systems of large aperture, has been the first to recognise the extraordinary merit of von Seidel's investigations, and to pursue them further. He has worked out the expressions for the form of the focal surface in general cases for oblique rays, and in particular for the special forms which that surface assumes when the Euler condition and the Frauenhofer condition are fulfilled. He also investigated the distribution of the light in the coma, and its changes of shape when the position and size of the stop are changed. Finsterwalder further shows that if, for a given dioptric system and a given object-plane, the condition $S(1)S(3) - [S(2)]^2 = 0$ is fulfilled, then the focal surface (that is to say, the surface containing the apices of all the individual focal surfaces for the separate points of the object) will be a spherical surface, the curvature of which is

$$\frac{S(1)\ S(4) - [S(2)]^2}{S(1)\ \nu_{2k+1}};$$

whence it follows that, if S(1) is not zero, the image surface will be flat if the condition $S(1)S(4) - [(S)]^2 = 0$ is fulfilled. Further, the curvatures of the two spherical surfaces which contain the tangential and radial focal lines of the oblique astigmatic pencils are respectively

$$\frac{2\ S(3) + S(4)}{\nu_{2k+1}} \text{ and } \frac{S(4)}{\nu_{2k+1}}.$$

If $S(3) = 0$, the first curvature becomes equal to the second; and if S(4) likewise $= 0$, the curvature of the focal plane vanishes. Finsterwalder's memoir contains a most elegant investigation of the phenomenon of coma, and is illustrated by a number of plates to elucidate the singular shapes thrown upon a screen through an uncorrected lens by oblique pencils proceeding from a non-axial luminous point. The condition that $S(4) = 0$ is equivalent to the proposition of Petzval, that to flatten the image it was necessary to fulfil the condition $\Sigma\frac{1}{fn} = 0$, where f is the focal length of any of the component lenses and n its index of refraction. But von Seidel justly remarks that this condition is *of itself* of no significance: its significance begins when, as a preliminary, $S(1) = S(2) = S(3) = 0$. He also most acutely points out that this condition, necessary to the flattening of the image, could not possibly be fulfilled so long as one has to deal with those kinds of glass in which the dispersion and the refractivity increase or decrease together.

Remarkable as these researches of von Seidel are, it is of interest to note that an even more general method of investigation into lens aberrations had been previously propounded. This is the fragmentary

[1] "Die von optischen Systemen grösserer Oeffnung und grösseren Gesichtsfeldes erzeugten Bilder, auf Grund der Seidelschen Formeln untersucht," von S. Finsterwalder, *Abh. d. II. Classe d. k. Akad. d. Wissenschaften in München*, Bd. iii. p. 519.

paper[1] of Sir W. Rowan Hamilton, introducing into optics the idea of a "characteristic function," namely, the *time* taken by the light to pass from one point to another of its path. True, he did not work out the relations between the constants of his formulae and the data of the optical system. Yet the method, as a mathematical method of investigation, is unquestionably more powerful. It has recently, and independently, been revived by Thiesen,[2] whose equations include those of von Seidel.

The latest development of advanced geometrical optics is due to Professor H. Bruns, who has shown[3] that in general the formulae that govern the formation of images can be deduced from an originating function of the co-ordinates of the rays—a function termed by him the *eikonal*—by differentiating the same, just as in theoretical mechanics the components of the forces can be deduced by differentiation from the potential function. Bruns's work is based upon the theory of contact-transformations of Sophus Lie. But as yet neither the formulae of Bruns nor those of Thiesen have been reduced to such shape as to be available for service in the numerical computation of optical systems.

---

[1] On some Results of the View of a Characteristic Function in Optics," *B.A. Report* for 1833, p. 360.

[2] "Beiträge zur Dioptrik," *Berl. Berichte*, 1890.

[3] "Das Eikonal," *Abhandlungen der math.-phy. Classe der k. sächsischen Akad. d. Wissenschaften*, Bd. xxi., Leipzig, 1895.

LIBRARY OF THE UNIVERSITY OF CALIFORNIA

APPENDIX II

ON THE SINE-CONDITION

In the foregoing pages such frequent mention is made of the "sine-condition" to be fulfilled by optical systems, that no excuse is necessary for adding a short explanatory notice, based upon the paragraphs about this matter by Professor Lummer in his edition of the *Optics* of Müller-Pouillet.

Let it be granted at the outset that we know that it is possible to calculate the form of a lens which shall have no central spherical aberration—that is to say, one which forms an accurately-focussed image of a point situated on the axis—and that this can be done even for a wide-angled pencil travelling along the principal axis. This granted, let us see what are the conditions to be observed in order that, with equally wide-angled pencils, such a system may be made also to give well-focussed images of points that lie, not on the axis, but near to it. As this requirement was fulfilled in optical instruments of small aperture, it was for a long time supposed it might therefore also be attained without further conditions in optical systems with a wide aperture. But this is not so by any means. Even in those cases where the most complete removal of spherical aberration at the central point of the field has been attained, those points of the image that lie immediately at one side of the axis are in general so indistinct that the size of their circle of aberration may be regarded as comparable with the distance that the object-point is situated laterally from the axis.

According to Abbe this want of definition for points aside of the axis originates in the circumstance that, for an indefinitely small element of the surface of the object, the different zones of the spherically corrected lens project images having different linear magnifications.

This property is illustrated in Fig. 49. Let the lens-system S be so corrected that it focusses at the point Q *all* the rays that go out from the point-object at P. That is to say, both the central rays A and the marginal rays M are refracted accurately to meet at Q. But for rays that emanate not from P, but from a point p a little to one side, it is quite otherwise. The axial pencil a emerging from this point produces the image q', which is quite easily found by the rule for finding images by any rays in a meridional plane containing the axis, whilst the extreme pencil m is refracted to some point q'', where it produces a more or less

well-defined image of p. Consequently there are formed images of the small object Pp, such as Qq' and Qq'', of sizes that differ according to whether the part of the lens used in their formation is the middle part

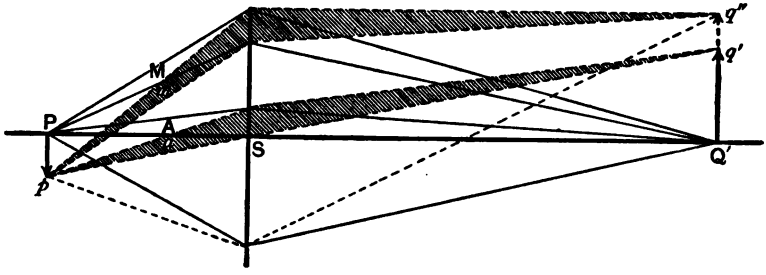

FIG. 49.—Diagram illustrating Formation of Image by Central and by Marginal Rays.

or a marginal zone. If all zones are acting together, then all these differently-sized images are formed simultaneously on the top of each other, their centres coinciding, but not their edges. These differences between the magnifying powers of the middle and edge of an objective may in the case of a microscope objective amount to 50 per cent or more.

Such want of definition was for a long time falsely assigned to the inappropriate designation of "curvature of image" or "want of flatness" of the field. The phenomenon of *coma*, or lob-sided deformation of the image of a bright point situated away from the axis, was indeed recognised; but it was not known before the time of Abbe that all the real faults of curvature of field and radial astigmatism of oblique pencils were masked by the more important errors due to the inequality of the magnifying powers of the different zones of the lens, in any lens that is merely spherically corrected for the centre of the field. Coma is indeed a manifestation of this same error, as may readily be demonstrated by placing against a lens an annulus of paper, of such a size as to allow a central portion and a marginal zone to be used. If a bright point is caused to cast on a white screen by means of oblique pencils through this lens, the pear-shaped coma will be seen to be divided into an inner smaller pear-shaped patch with a bright tip, and an outer ovate and much more distorted margin.

But if a lens-system is to be truly aplanatic—in the sense in which Abbe uses that term—that is to say, if it is to reproduce *as a plane element* in the image a *plane element* of surface of an object, it must, beside being spherically corrected for a point on the axis, have the same magnifying power for all its zones. The necessary and sufficient condition that all the zones of the system S should produce equal-sized images Qq' of the object Pp' is the following:—

The ratio of the sines of the angles made with the axis by any and every ray proceeding from the axial point P, *and refracted to the image point* Q, *must be constant; or*

$$\frac{\sin u'}{\sin u} = \text{constant}.$$

This is the sine-condition which is of so vast an importance in the production of correct images. When the *sine-condition* is not fulfilled, and only axial spherical aberration has been corrected, then the image of a small *flat* object will appear like the tip of a cone viewed from above. Henceforth, therefore, no lens ought to be termed *aplanatic*[1] unless it is so constructed that, while its central spherical aberration is annulled for the particular focal distance at which it is intended to be used, it shall also fulfil the sine-condition. The two conjugate points on the axis for which it is thus doubly corrected, so that a flat element of luminous surface placed at one is accurately imaged as a flat element of surface at the other, are properly termed *the aplanatic points* of that lens-system. Abbe's test for the true aplanatism of a lens consists in viewing through the lens a system of distorted hyperbolae resembling Fig. 7, *c*, p. 34, which, when placed at the proper distance from the aplanatic point of the lens, yields an image of undistorted straight lines. By means of this criterion Abbe had come to the conclusion that optical practice had satisfied theoretical requirements long before the importance of the sine-law was known, and even before the publication in 1873 of the sine-condition. As a matter of fact, all the older microscopic objectives that are truly aplanatic do also satisfy the sine-condition. The older microscope makers, while seeking in a purely empirical way to find such combinations of various lenses as should satisfy the eye by giving the best definition when applied to test objects, unconsciously varied the combination of lenses of the objective until *unknowingly* they attained not only spherical correction, but also the fulfilment of the sine-condition. This is but another instance of the artist, in the practice of his art, outstripping the science of his time.

In order to ascertain the constant of the equation $\frac{\sin u'}{\sin u} = \text{constant}$, one may proceed in several different ways. Abbe[2] deduced the sine-condition and the value of the ratio from the requirement that two conjugate elements of surface should be delineated by all partial pencils with an equal magnification, or at least provided the departures from equality are negligibly small compared with the size of the elements in question.

At the same epoch von Helmholtz[3] demonstrated the constancy of the ratio of the sines of conjugate axis-angles under the condition that all the light emanating from an element of surface and traversing the system should actually be reunited in the image which that system, supposed *aberration-free*, should cast according to the ordinary rules of geometrical optics, as taught by Gauss's theory. He therefore thus applied the law of the conservation of energy to the radiation of light.

In a much more general way, and even before Abbe or von Helmholtz,

---

[1] This is a narrower definition than that usually found in optical treatises. For example, Herschel (*Encyclop. Metrop.*, art. "Light," p. 389) defines an aplanatic lens as "one which shall refract all rays, for a given refractive index, and converging to or diverging from any one given point, to or from any other."

[2] *Archiv für mikroscopische Anatomie*, ix. 40, 1873; and Carl's *Repertorium der Physik*, xvi. 303, 1881.

[3] "Ueber die Grenze der Leistungsfähigkeit der Mikroskope," *Pogg. Annalen*, Jubelband, 1874, p. 557; and *Wissenschaftliche Abhandlungen*, ii. p. 185.

Clausius[1] deduced from the second law of thermodynamics the relation to be satisfied in order that the whole of the energy from a small element of surface within a cone of indefinitely small solid-angle should be transmitted to a second element. If one applies the equation of Clausius to the formation of the image of an element of surface *by means of wide-angled pencils of rays* traversing an optical system, one obtains the *sine-condition*, and for its constant the same value as Abbe and von Helmholtz have assigned to it.

The simplest and most elementary method of deducing the sine-condition is that given by Mr. John Hockin.[2] He proceeds from the assumption that in an aplanatic system S (Fig. 50), which forms the image

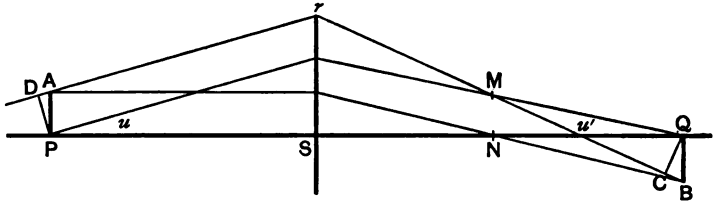

FIG. 50.

QB of the object PA by means of suitably wide-angled pencils, the "optical lengths"[3] between the conjugate pairs of points are in every possible way equal to one another, apart in this case also from small differences of a negligibly small order of magnitude. Hockin's process consists in taking into consideration only the narrow pencils proceeding from A and P parallel to each other, and of which the axial pairs of rays cut each other in (say) N, and the parallel pairs of marginal rays in (say) M.

Then the perpendicular PA represents the wave surface of the rays which intersect in N, and the perpendicular PD from P on to the backward produced ray A*r* is the wave surface of the rays which cut each other in M. Consequently the "optical length" PMQ = PNQ;
but since AMB = ANB

$$\begin{aligned} \text{AMB} - \text{PMQ} &= \text{ANB} - \text{PNQ} \\ &= \text{AN} + \text{NB} - \text{PN} - \text{NQ}, \end{aligned}$$

or since AN = PN

$$(\text{AM} + \text{MB}) - (\text{PM} + \text{MQ}) = (\text{NB} - \text{NQ}),$$

and consequently

$$(\text{AM} - \text{PM}) + (\text{MB} - \text{MQ}) = (\text{NB} - \text{NQ}).$$

The difference on the right side of the equation vanishes when the object becomes infinitely small.

Let us call the divergence-angles of conjugate rays u and u'; the linear dimensions of the infinitely small object and image dy and dy'; and

[1] *Mechanische Wärmetheorie* (3rd edition, 1887), i. 315; or English translation by Browne, p. 321.

[2] *Journal of the Royal Microscopical Society*, iv. 337, 1884.

[3] "Optical length" = distance traversed by light *in vacuo* during the time occupied in traversing the path considered = Σ (actual path $\times \mu$).

the wave length, or the refractive index, in the object-space λ or μ respectively; in the image-space λ' or μ'. Then if one equates the "optical lengths" to the distances reduced to their equivalents in empty space, there is obtained:—

$$AM - PM = -\frac{AD}{\lambda} = -\frac{\sin u\, dy}{\lambda}$$

$$BM - QM = +\frac{BC}{\lambda'} = +\frac{\sin u' dy'}{\lambda'}.$$

For λ is inversely proportional to μ, and the reduced length of $AD = \mu AD = \kappa \frac{AD}{\lambda}$.

If C is the foot of the perpendicular from Q on to MB, and if the distance BQ is a small magnitude, we may write MC = MQ. We consequently obtain for infinitely small elements delineated with wide-angle pencils the condition

$$-\frac{\sin u\, dy}{\lambda} + \frac{\sin u' dy'}{\lambda'} = 0;$$

then

$$\frac{\sin u'}{\sin u} = \frac{dy}{dy'} \cdot \frac{\lambda'}{\lambda} = \frac{dy}{dy'} \cdot \frac{\mu}{\mu'} \quad . \quad . \quad . \quad [1].$$

Since this condition must be true for all pairs of values of u and u', *it must also be true for infinitely small values.* In this case, however, $\frac{dy'}{dy} = \beta_0$, that is, it is equal to the linear magnification for meridional rays. We therefore obtain

$$\frac{\sin u'}{\sin u} = \frac{\mu}{\mu_1} \frac{1}{\beta_0} \quad . \quad . \quad . \quad . \quad [2].$$

This equation assumes a still simpler form for the special case when the object is moved to infinity, as is approximately the case in the telescope. Instead of $\frac{\sin u}{\sin u'}$, we then have $\frac{h}{\sin u'} = \text{const.}$; h being the axial distance of the incident ray, as in Fig. 51. But since for meridional rays

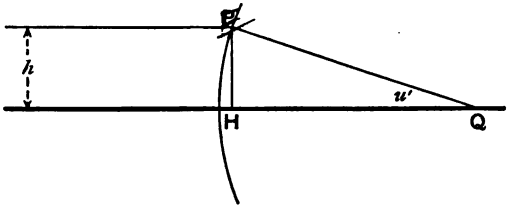

FIG. 51.

we must put $\frac{h}{\sin u'} = f'_0$, and since further from the triangle EQH it follows that $\sin u' = \frac{h}{EQ}$, or $\frac{h}{\sin u'} = EQ$, our condition simply is

$$EQ = \text{const.} = f'_0;$$

but that is, *the points of intersection of the parallel incident rays with their*

conjugate emergent parts lie on a circle whose radius is equal to the focal length for meridional rays.[1]

If the sine-condition is fulfilled, then an *element* of surface is distinctly delineated by pencils of *any* angular width, but an *extended* surface is not necessarily so, nor would this be so either for *several elements* situated behind one another. There is consequently *only one pair of aplanatic points*, so that an objective must be once for all computed for that pair of points for which it is to be used. So soon as the object is moved from the aplanatic point, to another position on the axis, its image, which moves to a new conjugate point, is now aplanatic no longer.

But even the modest requirement of only *two* different points on the axis being rendered aberration-free, cannot be fulfilled, if the aplanatic delineation of an element of surface has been accomplished. For in order to satisfy that requirement, as Czapski[2] has proved by a method analogous to that of Hockin, the condition

$$\frac{\sin\frac{u}{2}}{\sin\frac{u'}{2}} = \text{const.} = \beta_0\frac{\mu'}{\mu}. \quad . \quad . \quad . \quad . \quad [3].$$

must be satisfied; which stands in contravention of the sine-condition for aplanatic systems, $\frac{\sin u}{\sin u'} = \beta_0\frac{\mu'}{\mu}$.

From the two conditions it follows that, with all the aid of practical optics, one can approximate very closely to the attainment of the following theoretical goal—namely, *to form a perfectly sharp image, by means of wide-angled pencils of any width, either of an indefinitely small element of surface perpendicular to the axis, or else of an indefinitely short piece of the axis itself.* On the other hand, *it remains practically impossible to form a perfectly sharp image of a small finite axially situated element of space.* The conditions that are required to give perfect definition to its element of longitudinal dimension contravene those required to give perfect definition of its elements of lateral extension. In the language of the photographer, a perfect wide-angled rapid lens which will be suitable for copying a flat picture, with precise definition right up to the extreme margins, will have little or no "depth of focus," while a rapid lens which has great depth of focus will be incapable of giving sharp images right up to the margin of a wide field.

---

[1] The point of intersection E is therefore called the "chief point," and the distance EQ the focal length of the ray associated with it.

[2] *Theory of Optical Instruments*, pp. 103-105.

APPENDIX III

COMPUTATION OF LENSES. TRIGONOMETRICAL FORMULAE OF VON SEIDEL

HOWEVER useful may be all the approximate formulae which are based, for the sake of simplicity, upon neglecting the small quantities of the higher orders in the series of terms, they can only serve to indicate the approximate form of any desired optical system. They are simple because they neglect the details which are concerned in the various aberrations, and they are only approximately fulfilled by pencils of rays of *small* angular value. For accurate reckoning of the aberrations of small pencils they are useless, and are equally useless for even the rough calculation of wide-angled lenses. For example, in the design of a microscope objective which is intended to focus accurately and stigmatically a cone of rays of 180° angle, all mere approximation-formulae afford no help. Even if one introduces into them the higher terms that are usually neglected, they are still useless, because then they lose their simplicity for computational purposes. Petzval, in 1857, attempted to develop the series of terms up to those of the ninth order, and found the task hopeless.

Hence, failing general formulae that combine the two incompatible conditions of being at once simple and accurate, one is compelled to have recourse to another method of attacking the calculations—and that method, though of perfect accuracy, an empirical one. One assumes (on a basis of experience and guess-work) a tentative optical system, and then one *tests* it, whether on paper, or by actually constructing it. The test on paper consists in computing accurately the course through the system of a few typical rays, and so one judges of the performance of the system. The result of the computation suggests a possible modification—involving a re-computation; and so the work of designing proceeds tentatively. Sometimes one arrives at a point where it is worth while to grind the lenses and build up the system, and thus test it optically, when experimental adjustments may aid toward a further perfection.

But even thus on paper one cannot compute accurately the path followed by even a few selected rays without having formulae by which to compute. And if one would save time, one would wish to have some theoretical guidance toward selecting these rays.

The experimental process may follow various lines. The experimenter tries the optical effect of modifying parts of the system, changing the

individual lenses, trying lenses of other kinds of glass, altering the distances between them, or stopping them down until the image of the test-object is seen distinctly and free from colour-defects. This procedure is really a fine art, rather than a science; and in the hands of a true artist, such as Hartnack of Potsdam, or as Powell of the firm of Powell and Leland, it has yielded excellent results.

For large telescope objectives the empirical process—always a fine art—takes a different course. The curves of the lenses are first calculated approximately, by the aid of the rough formulae of approximation of the ordinary text-book, and the glasses are then ground and polished. Then, directing the telescope upon a fixed star (or upon an "artificial star," to serve as a luminous point), one observes the images formed in different parts of the field, aiding the eye by means of a high-power magnifying glass. Then the objective, or its individual surfaces, are ground or polished by hand, zone by zone, or bit by bit of the surface, until each zone and every part of each zone gives a sharp and colourless image in one and the same plane. This method of local retouching, which was used for reflecting telescopes by Foucault, has been used for object glasses by many makers, notably by T. Cooke of York, and by none with more striking success than by the late Mr. Alvan Clarke.

The process of empirical computation is in any case tedious also. But it brings with it other possibilities, enabling the computer to estimate the various individual aberrations as to their several relative values, and to eliminate one or other of them, according to the ultimate purpose for which the lens is destined. Moreover, it leads to more general results, and gives clear indications for such further modifications of the system as will improve it, so that the desired end may be reached, step by step, indeed, but by steps *the effect of which will be thus known beforehand from the calculations.*

Naturally, then, one starts, in this case also, by means of the formulae of approximation as already known for treating central spherical aberration and chromatic aberration, and so calculates roughly a system which shall have the required focal length, etc., fulfilling the prescribed conditions, provided only *small*-angled pencils near the axis are used. This is, of course, exceedingly simple. Then begins the operation of *testing.* One must compute the exact path, right through all the successive surfaces, of a certain number of individual incident rays, and see where they intersect the focal plane that has been drawn through the principal focus of the central axial rays (or "null-rays"). For this purpose one must make use of a rigid *trigonometrical computation.* The importance of this process is such that it must be described in full for the special case of rays which actually intersect the axis of the system, and which therefore lie in some one meridional plane with the axis. These, which we may call *main* rays, are simpler to calculate than others, because the whole course of such a ray, before and after each successive refraction, will lie in the same plane. After we have considered such simple cases, we shall be better able to appreciate the labours by which L. von Seidel extended the method of computation by giving exact trigonometrical formulae for those rays which lie out of any such meridional plane, and which never intersect the axis.

Computation of Main Rays

To follow the course of a main ray, we may consider first the simple case of a spherical refracting surface bounding the junction of two refracting media. Following von Seidel's notation (p. 104, *ante*), we will use odd suffixes for the media, and even suffixes to denote the surfaces. If this first surface is numbered zero, then the refractive indices of the anterior and posterior media will be denoted by μ_{-1} and μ_{+1} respectively. The radius of curvature of the surface will be r_0; its vertex may be denoted by S_0, and its centre of curvature as M_0. Then Fig. 52 will serve to

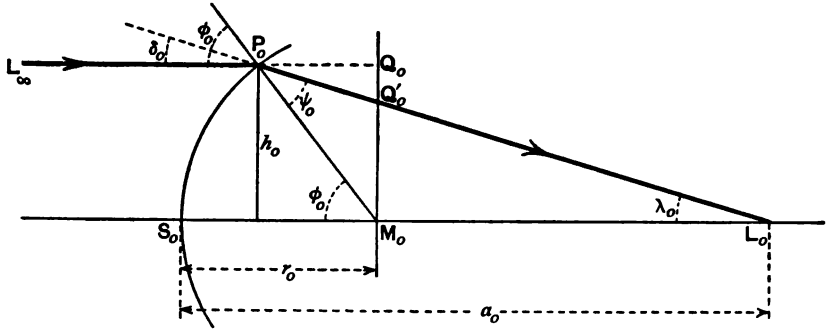

Fig. 52.

demonstrate the geometrical relations between the incident and refracted rays. Let the luminous point be considered as situated at L, at an infinite distance to the left along the axis S_0M_0, so that its rays are a beam parallel to this axis. Then any single ray of this beam will be characterised by specifying the point P_0 at which it intersects the refracting surface, the point P_0 lying at a distance h_0 from the axis. Let the refracted ray P_0L_0, which is conjugate to the incident ray, meet the axis at L_0, at the distance $S_0L_0 = a_0$ from the vertex. The radius $r_0 = S_0M_0 = P_0M_0$ will be reckoned positive if it lies to the right of the refracting surface, or negative if it lies to the left. The angles of incidence and refraction are called respectively ϕ_0 and ψ_0, the angle of deviation δ_0, and the angle at which the refracted ray meets the axis λ_0; these latter being equal to one another, since the incident ray is parallel to the axis. Then, since P_0M_0 is normal to the surface, we have

$$\sin \phi_0 = \frac{h_0}{\pm r_0} \quad . \quad . \quad . \quad . \quad . \quad [1].$$

$$\sin \psi_0 = \frac{\mu_{-1}}{\mu_{+1}} \sin \phi_0 \quad . \quad . \quad . \quad . \quad [2].$$

$$\delta_0 = \lambda_0 = \phi_0 - \psi_0 \quad . \quad . \quad . \quad . \quad . \quad [3].$$

And by the fundamental principle of triangles, as applied to the triangle $P_0L_0M_0$, we have

$$\frac{M_0L_0}{P_0M_0} = \frac{a_0 \mp r_0}{\pm r_0} = \frac{\sin \psi_0}{\sin \lambda_0} \quad . \quad . \quad . \quad . \quad [4].$$

This gives the value of $a_0 \mp r_0$, from whence the value of a_0 can be immediately written as

$$a_0 = r_0 \frac{\sin \psi_0 + \sin \lambda_0}{\sin \lambda_0} \quad . \quad . \quad . \quad . \quad [5].$$

If a plane be considered as drawn through the centre of curvature M, transverse to the axis, the incident and refracted rays will meet it in the points Q_0 and Q'_0 respectively ; the incident and refracted rays both lie in the plane triangle $P_0Q_0M_0$, and we have the relation

$$\frac{\mu_{+1}}{\mu_{-1}} = \frac{\sin \phi_0}{\sin \psi_0} = \frac{M_0Q_0}{M_0Q'_0} \quad . \quad . \quad . \quad . \quad [6].$$

Next let us consider the case of two successive refracting surfaces, a second spherical surface, with its vertex at S_2 and its centre of curvature at M_2, being the boundary between the medium of refractive index μ_{+1} and the third medium of index μ_{+3}. The radius r_2 of this second surface is S_2M_2 or P_2M_2, where P_2 is the point where the ray E_0L_0 meets it, and is refracted along P_2L_2. The angle of incidence is $L_0P_2M_2$ or ϕ_2, and that of refraction $L_2P_2M_2$ or ψ_2. The angle of deviation is $L_2P_2L_0$ or δ_2 ; and the angle at which the refracted ray meets the axis is $P_2L_2M_2$

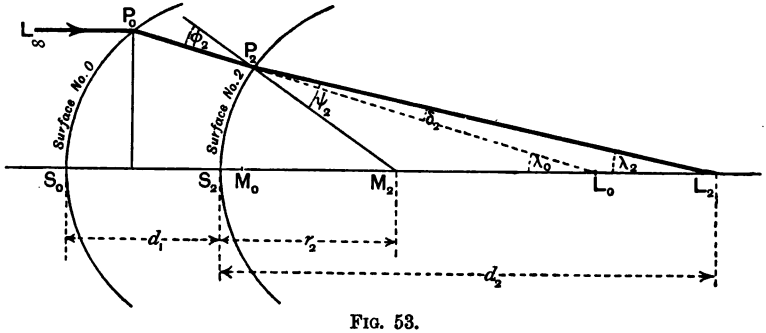

FIG. 53.

or λ_2. Then, considering the relations between the angles and sides of the triangle $P_2M_2L_0$, we have

$$\sin \phi_2 = \frac{M_2L_0}{P_2M_2} \sin \lambda_0 \quad . \quad . \quad . \quad . \quad [7] ;$$

or, calling the distance between the two vertices S_1 and S_2 by the symbol d_1,

$$\sin \phi_2 = \frac{a_0 \mp r_2 - d_1}{\pm r_2} \sin \lambda_0 \quad . \quad . \quad . \quad [8].$$

Also, from the law of refraction,

$$\sin \psi_2 = \frac{\mu_{+1}}{\mu_{+3}} \sin \phi_2 \quad . \quad . \quad . \quad . \quad [9].$$

Further

$$\delta_2 = \phi_2 - \psi_2 \quad . \quad . \quad . \quad . \quad [10].$$

But, in contradistinction to the former case,

$$\lambda_0 = \lambda_2 - \delta_2 \quad . \quad . \quad . \quad . \quad [11].$$

Because (as shown in Fig. 53) μ_{+3} is less than μ_{+1}, and ϕ_2 is less than ψ_2, it follows that δ_2 is negative. From the triangle $L_2P_2M_2$ it follows that

$$\frac{M_2L_2}{P_2M_2} = \frac{a_2 \mp r_2}{\pm r_2} = \frac{\sin \psi_2}{\sin \phi_2} \quad . \quad . \quad . \quad [12];$$

whence

$$a_2 = r_2 \frac{\sin \psi_2 + \sin \phi_2}{\sin \phi_2} \quad . \quad . \quad . \quad . \quad [13].$$

If there follow several more refracting surfaces, then one calculates out for each of them, exactly as for this second surface, each of the five corresponding quantities ϕ, ψ, δ, λ, and a. The value of a in the last medium gives the *apparent* focal length (or back focal length) of the lens-system for the ray corresponding to the zonal radius h_0, which has been taken for the incident ray in the calculation; and if the system had no spherical aberration, a would come out the same for all values of h_0. If, then, when the computation is made for several values of h_0, that is, for several zones of the lens, the differences give the values of the longitudinal aberration; and from these one could calculate the size of the circle of confusion in any given plane near the focus, and also, approximately, the distribution of the light within such circle of confusion.

To compute the axial values for these rays that go through the middle of the lens, and for which $h_0 = 0$, we have recourse to an artifice, because if we took $\phi = 0$, then $\psi = 0$ and $\lambda = 0$, and a would become indeterminate. So we must turn back to formula [2] of p. 124, which, when the angles are indefinitely small, may be written strictly correctly as

$$\psi_0 = \frac{\mu_{-1}}{\mu_{+1}} \phi_0 \quad . \quad . \quad . \quad . \quad [14].$$

But also, under these conditions

$$\frac{a_0 \mp r_0}{\pm r_0} = \frac{\psi_0}{\phi_0 - \psi_0} = \frac{\mu_{-1}}{\mu_{+1} - \mu_{-1}} \quad . \quad . \quad . \quad [15];$$

or

$$\frac{a_0 \mp r_0}{\pm r_0} = \frac{1}{\frac{\phi_0}{\psi_0} - 1} = \frac{1}{\frac{\mu_{+1}}{\mu_{-1}} - 1} \quad . \quad . \quad . \quad [16].$$

$$a_0 = r_0 \frac{\psi_0 + \lambda_0}{\lambda_0} = r_0 \frac{\phi_0}{\lambda_0} = r_0 \frac{\mu_{+1}}{\mu_{+1} - \mu_{-1}} \quad . \quad . \quad [17].$$

But there is another way to find the values for axial rays. One may, after calculating down (as in the example given below) for any particular zonal radius h_0, simply repeat for the axial ray the same values as far as

to the item *log sin* ψ ; and then, following on, write for the axial rays, instead of the angular values of ϕ_0, ψ_0, and δ_0, *the values of their natural sines*, and operate with these instead of the angles. In other words, instead of forming the item $\phi_0 - \psi_0$, substitute the item $\sin\phi_0 - \sin\psi_0$. It is easily shown that this process is legitimate. Equation [16] is rigidly true for main rays. Multiplying both numerator and denominator by sin ψ, we have

$$\frac{a_0 \mp r_0}{\pm r_0} = \frac{\sin\psi}{\frac{\mu_{+1}}{\mu_{-1}}\sin\psi - \sin\psi} = \frac{\sin\psi}{\sin\phi - \sin\psi},$$

that is to say, we may use for axial rays the same formula as in equation [4] we use for zonal rays, except that for λ_0, or $\phi - \psi$, we write sines instead of angles. And this saves time, because in computing the zonal rays we have already had to compute log sin ψ.

Example of Computation of a Parallel Beam through a Simple Lens

Let the following be the data of the simple lens (Fig. 54) :—

$\mu_{-1} = 1{\cdot}00000$
$\mu_{+1} = 1{\cdot}52964$
$\mu_{+3} = 1{\cdot}00000$
$d_1 = 8$ millimetres
$r_0 = +69{\cdot}250$ millimetres
$r_2 = -216{\cdot}195$ millimetres

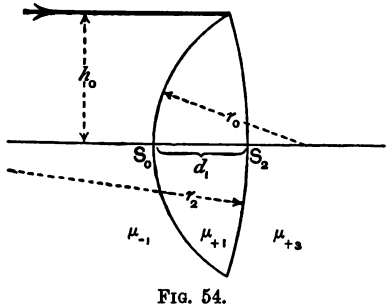

Fig. 54.

It is required to find the principal focal length for rays which meet the lens at a zone of radius $h_0 = 15$ millimetres, for a zone of radius $h_0 = 10$ millimetres, and for the axial or "null" rays.

	$h_0 = 15.$	$h_0 = 10.$	Axial Ray.
$\log h_0$	1·17609	1·00000	1·17609
$\log (1 : \mp r_0)$	8·15958	8·15958	8·15958
$\log \sin \phi_0$	9·33567	9·15958	9·33567
$\log (\mu_{-1} : \mu_{+1})$	9·81541	9·81541	9·81541
$\log \sin \psi_0$	9·15108	8·97499	9·15108
ϕ_0	12° 30′ 35″	8° 18′ 10″	0·21661
$-\psi_0$	− 8° 8′ 27″	5° 25′ 1·2″	0·14161
$\delta_0 = \phi_0 - \psi_0 = \lambda_0$	4° 22′ 8″	2° 53′ 8·8″	0·07500
$\log \sin \lambda_0$	8·88183	8·70196	8·87506
$\log (1 : \sin \lambda_0)$	1·11817	1·29804	1·12494
$\log \sin \psi_0$	9·15108	8·97499	9·15108
$\log \pm r_0$	1·84042	1·84042	1·84042
$\log (A_0 \mp r_0)$	2·10967	2·11345	2·11644
$A_0 \mp r_0$	128·727	129·852	130·75
$\pm r_0 \mp r_2 - d_1$	277·447	277·447	277·447
$A_0 \pm r_2 - d_1$	406·174	407·299	408·197
$\log (A_0 \pm r_2 - d_1)$	2·60871	2·60991	2·61087
$\log \sin \lambda_0$	8·88183	8·70196	8·87506
$\log (1 : \pm r_2)$	− 7·66515	− 7·66515	− 7·66515
$\log \sin \phi_0$	− 9·15569	− 8·97702	− 9·15108
$\log (\mu_{+1} : \mu_{+3})$	0·18459	0·18459	0·18459
$\log \sin \psi_2$	− 9·34028	− 9·16161	− 9·33567
ϕ_2	− 8° 13′ 42″	− 5° 26′ 32·9″	− 0·14161
$-\psi_2$	12° 38′ 44″	8° 20′ 31·1″	+ 0·21661
$\delta_2 = \phi_2 - \psi_2$	4° 25′ 2″	2° 53′ 58·2″	0·07500
λ_0	4° 22′ 8″	2° 53′ 8·8″	0·07500
$\lambda_2 = \lambda_0 + \delta_2$	8° 47′ 10″	5° 47′ 7″	0·15000
$\log \sin \lambda_2$	9·18397	9·00346	9·17609
$\log (1 : \sin \lambda_2)$	0·81603	0·99654	0·82391
$\log \sin \psi_2$	− 9·34028	− 9·16161	− 9·33567
$\log \pm r_2$	− 2·33485	− 2·33485	− 2·33485
$\log (A_2 \mp r_2)$	2·49116	2·49300	2·49443
$A_2 \mp r_2$	309·856	311·172	312·20
$\pm r_2$	− 216·197	− 216·197	− 216·197
A_2	93·659	+ 94·975	+ 96·003

By the above computation we have found the angle of inclination λ_2 (Fig. 53) of the individual rays, with respect to the axis in the image-region, and therefore the distance S_2L_2 of their points of intersection from the lens. This intersection-distance (which photographers inaccurately call the "back focus") must not be confused with the real focal length. To find the latter, we must—following out the construction of Fig. 55—produce the emerging ray P_2L_2 backwards, until it meets the prolonged incident ray LP_0 at C. Then a perpendicular dropped from C to E on the axis will give at E the "principal point" or "equivalent point" ("Haupt-punkt" of Gauss), from which the true focal length CL_2

is to be measured. For axial rays CL_2 is equal to EL_2, because of the smallness of the angle λ_2. For the rays of greater zonal distance CL_2 is

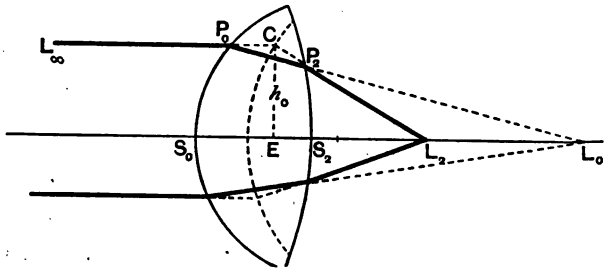

FIG. 55.

greater than EL_2. The next stage in the computation is to reckon out these two magnitudes for the three rays chosen to be computed.

From the triangle CEL_2 it follows that

$$EL_2 = \frac{CE}{\tan \lambda_2}$$

$$CL_2 = \frac{CE}{\sin \lambda_2}.$$

Let EL_2 be called F (the true focal length), and CL_2 be called G (the focal length reckoned obliquely): then the computation will proceed as follows:—

	$h_0 = 15.$	$h_0 = 10.$	Axial Rays.
log h_0	1·17609	1·00000	1·17609
log (1 : tan λ_2)	0·81090	0·99432	0·82391
log F	1·98699	1·99432	2·00000
F	97·05	98·70	100·00
log h_0	1·17609	1·00000	1·17609
log (1 : sin λ_2)	0·81603	0·99654	0·82391
log G	1·99212	1·99654	2·00000
G	98·20	99·21	100·00

One sees that, for the axial rays, the value of G coincides with that of F. What the point E at the foot of the perpendicular CE is for the axial (null) rays, the point C is for the other rays that have a finite zonal distance from the axis. We may accordingly call the point C a "chief"[1] point of these rays, the distance CL_2 *being the focal length*

[1] Such points must not be confounded with the "principal points" of Gauss, sometimes called in English the "equivalent points," or the "optical centres"; for these, unlike the "chief" points, are *always situated on the axis.*

corresponding to the particular zonal distance *h*. The focal length EL_2 for the axial rays is for distinction called the *true focal length*. In order that the *sine-condition* (see Appendix II.) should be fulfilled by any lens, it is requisite that the locus of all "chief" points such as C should be at equal distances from the principal focus L_2, as, indeed, is shown by the dotted circle through C in Fig. 55.

In Lummer's edition of Müller-Pouillet's *Optics*, p. 573, there is given a complete computation of a Gauss's telescope objective, an achromat made of two non-cemented lenses of Jena glass. Many others are to be found in the *Handbook of Applied Optics* of Steinheil and Voit. Another example of the complete computation of a two-lens objective—an aplanat of 43 inches focal length—by Dr. Harting, is given in the *Zeitschrift für Instrumentenkunde*, vol. xix. p. 269 (1899); see also vol. xviii. p. 357 (1898).

Computation of Rays which do not intersect the Axis

Rays which do not cut the optic axis, but pass it at some distance laterally, are much more difficult of calculation than the main rays considered above, because their path does not lie in any one plane, but changes from refraction to refraction at the successive surfaces of the system, making the formulae for precise computation more complex. For unless the best selection is made of those co-ordinates or parameters which are suited to the problem, the mathematical complications would frighten off even a practised computer. For example, one might at each successive deviation find it necessary to solve a new and awkward spherical triangle, or else give up a rigid solution and fall back upon successive approximations. And if, in lenses of great angular aperture, rays that do not lie in meridional planes must needs be taken into account, any plan that will simplify such computations is of real service.

At the instigation of the late Dr. Steinheil, Professor von Seidel undertook the investigation which led to the enunciation of exact trigonometrical formulae for this case. These were used first in the establishment of Steinheil at München, and, after a few months of successful use, they were in 1866 published in the *Abhandlungen* of the Bavarian Academy of Sciences.

These formulae, as used in Steinheil's establishment, are reprinted in the *Handbook of Applied Optics* of Steinheil and Voit, where it is stated that a computation, by their means, of a ray that does not cut the axis, takes only about twice as long as that of a ray that is in a meridional plane. Nevertheless, they are not now used in practical work. For it has been found sufficient for all practical purposes to compute only—as in the example given—a few rays which lie in a meridional plane and meet the lens at different distances from the middle point. The calculation of these is quite laborious enough. The work of Steinheil and Voit above referred to gives a large number of cases of the computations for lenses consisting of two members.

GENERAL INDEX

(Numbers refer to pages; those in italics to footnotes.)

ABBE, Professor E., researches of, 45
  lens-pupils, 37, *37*
  theory and writings, *6*, *34*, 36, 40, 118
  use of negative correcting lens, 91
Aberration, axial, 8
  central (see axial)
  chromatic, 11, 21, 23, 40
    of focal lengths, 12, 21, 23
    of position of images, 12
  circle of, 21
  spherical, 8
    at image of stop, 31, 32
    chromatic differences of, *40*
    oblique (see *Coma*), 7, 8
Aberrations, theory of, 7
Aberrationless surfaces, 21
ABNEY, Sir W., pin-hole photography, *17*
Achromat, 41
  "old" and "new" defined, 46
  relative focal lengths of components of, 45, 49, 54
  simple rule for construction of, 53
  two forms of old, 43
Achromatic lens, 41
  components of, 45
  simple rule for, 53
Achromatism in double-objectives, 70
AIRY, Sir G., curvature of image, *49*
ALDIS, H. F., 86, 88
Anastigmat, Zeiss-Rudolph, 62-64, 76
  double, convertible, definition of, 66
  Collinear, 79
  convertible Goerz, 78
  convertible Zeiss, 66, 79, 81
  Goerz-Hoegh, 66, 77
  Miethe, 75
  Planar, 81
  Universal Symmetrical (Ross), 86
  Protar, 67
  Triple (Cooke-Taylor), 90
  Unar, 83
Anastigmatic triple-cemented lens, 65
Angle-true delineation, 16, 29
Antiplanet of Steinheil, 56, 61, 64
Aperture-ratio, influence of stop on, 35
Aplanat, definition of, 36
  Steinheil's, 68, 73
Aplanatic combinations, 69
Astigmatic difference, 24
Astigmatism, nature of, 9
  radial, 9, 24
Axial rays, 8

BAILLE, J. B., on indices of glass, 45
Barlow telescope, 99
Barrel-shaped distortion, 33
BECK, CONRAD, writings of, *22*, *43*
BECK, R. and J., Voigtländer *Collinear*, 80
BERGHEIM lens (see *Dallmeyer*)
BOW, R. H., *25*
BRUNS, H., writings referred to, *115*
BUSCH, *Pantoscope*, 73

Camera, pin-hole, 14, 17, 29
Caustic curve, 27
CHANCE Brothers' glass, 45
Chemical focus, 22
CHEVALIER, time of exposure, 59
Chief rays, 29
  points, 31
Chromatic aberration, 11, 21, 23, 40
  aberration, correction of, 41
  differences of focal lengths, 12, 21, 23
    of position of images, 12
    of spherical aberration, *40*
  dispersion, 40
    elimination of, 40
Circle of least confusion, 25
  of least chromatic dispersion, 21
CLAUSIUS and sine-condition, 119
CODDINGTON, Treatise on Optics, 25, *49*
Collinear (Voigtländer-Kaempfer lens) 79

Collinear, relation between object and image, 3
Coma, the aberration called, 8, 11, 27
Compensation, principle of, 41
Compound lenses, distortion in, 36
distortion, condition of elimination of, 38
Concentric (Ross-Schröder lens), 56, 75, 85
Confusion, circle of least, 25
Convertible *Anastigmat*, 66
COOKE lenses, 90-93
Curvature of focal surface, 10
of plane of image, 10, 23
CZAPSKI, writings referred to, *6*, *33*, *34*, *69*, 121

DAGUERRE, 42
lens, 44, *44*, 60
DALLMEYER on Abbe lens-pupils, *37*
details of lens, 89
on size of needles, *17*
pin-hole photography, *17*
Rapid Rectilinear, 86
Rectilinear, 75
Stigmatic lenses, 86-90
telephotographic lens, 86, 99
triple achromatic, 86
use of negative correcting lens, 91
Wide-angle Rectilinear, 86
DALLMEYER-BERGHEIM portrait lens, *60*, 101
Definition, badness of, 21
Depth of focus, 15, 22
Diamond, image-flattening property of, 55
Difference, astigmatic, 24
Diffraction, 16, 19
Dispersion, chromatic, 12
chromatic, elimination of, 40
equivalents, table of, 51
residual (secondary spectrum), 41
circle of aberration due to, 21
Dispersive qualities of glass, 45
Distortion, 11, 23, 29
barrel-shaped, 33
causes of, 29
freedom from, 15
freedom from, condition for, 29, 32, 33
influence of stop on, 34
in compound lenses, 36, 38
in modern objectives, *39*
pincushion-shaped, 35
DOLLOND, achromatic lenses of, 40, 41
DRAPER, first portrait photographed by, 59
Double-objectives, achromatism of, 70
astigmatism in, 69
general properties of, 68
image by, in symmetric plane, 68
various kinds of, 72
(see *Anastigmat*)
DUBOSCQ, A., telephotographic lens, 99

EDER, text-book of, 75
Eikonal, the, 115
Equivalents, refraction and dispersion table, 51
EULER'S condition, 112
Euryscope (Voigtländer lens), 75

FEIL, glass of, 45
Field, flattening of, 47
flattening of, influence of stop on 24
flatness of, 24
influence of stop on size of, 35
FINSTERWALDER, writings referred to, 103
Focal lengths, chromatic difference of, 12, 21, 23
lines, 9, 24
surface, curvature of, 10
surfaces, 24
Focus, chemical, 22
depth of, 15, 22
FRAUENHOFER, condition, 11, *21*, *39*, 43, *43*, 112, 116
epoch of, 45, 46, 50
glass, used by, 45
objective, 11, 112
Fuzziness, 73

GAUSS, achromatic objective, 82, 130
equations of, 4
equations of, Seidel correcting terms for, 7
reference to theory of, 10, 13, 20, *31*, 41
Glass, Jena, factory for, 50
Jena, table of, 51
new and old kinds considered, 45
refractive and dispersive qualities, 45
GOERZ, Anastigmatic *Aplanat*, 66
Double *Anastigmat*, 66, 77
Double *Anastigmat*, Series IIa, 77
Convertible *Anastigmat*, Series II., 78
Lynkeiscope, 75
GRUBB, lens, *44*

HAMILTON, Sir W. R., writings referred to, 115
HARRIS, writings referred to, *94*
HARRISON, spherical objective of, 73
HARTING, writings referred to, 130
HARTNACK, Miethe's *Anastigmat*, *75*
Pantoscope, 75
Hauptpunkte and Hauptstrahlen, *31*
HEATH, Professor, on Geometrical Optics *33*
Heliometer objective, 11, 112
HELMHOLTZ, writings referred to, *33* and sine-condition, 118
HERSCHEL, Sir J., equation and condition, 12, *39*

HOCKIN, J., and sine-condition, 119
HOEGH, E. von, Anastigmatic *Aplanat*, 66
Double *Anastigmat*, 77
HOPKINSON, Dr. J., on glass, 45

Illumination, intensity of, and orthoscopy, 34
Image, artificial rectification of, 26
collinear, with plane mirror, 3
curvature of plane of, 10, 23
flattening, 26, 47,
flattening by separating two components, 57
formation by pin-hole camera, 14
formation by simple lens, 19
point-, 20
production of orthoscopic, 31
production of orthoscopic, condition for, 32
"telecentric" on side of, *34*

Jena, factory at, 50
glass, optical properties of, 50
glass, table of, 51

KAEMPFER, writings referred to, *34*
Collinear, 79
KESSLER, writings referred to, *42*

Lens, achromatic, 41
achromatic, relative focal lengths of components, 45, 49, 54
anastigmatic, triple-cemented, 65
compound, distortion in, 36, 38
effect of zones of, 28
meniscus, properties of, 23
pupils, 37, *37*
separation of, to flatten image, 57
simple, image formed by, 19
sphere-, 30
use of diamond in, 55
LIE, SOPHUS, writings referred to, 115
LUMMER, Professor O., edition of Müller-Pouillet's *Optics*, *6*, 103, 116
on Orthoscopy, *39*
Lynkeiscope (Goerz lens), 75

Meniscus lens, properties of, 23
MIETHE, Professor A., writings referred to, 76
anastigmat, 68, 75
telephotographic lens, 99
MÜLLER-POUILLET, text-book of *Optics*, *16*, *69*, *70*, 103

Needles, sizes of, *17*
NELSON, E. M., on Doublets, *54*
New achromat defined, 46

Objectives, achromatism of, 69
astigmatism in, 69
Objectives, distortion in modern, *39*
double, 36
double, various kinds (see *Anastigmats*), 71
performance shared unequally by components, 61
Rudolph's principle in, 62
symmetrical and unsymmetrical, 36
unsymmetrical, 59
Antiplanet, 56, 61, 64
Aplanat, 68, 73
DAGUERRE'S, 44, 60
Euryscope, 75
FRAUENHOFER'S, 11, 43
GAUSS'S, 82,
GRUBB'S, *44*
Lynkeiscope, 75
Orthostigmat, 80
Panoramic, 72
Pantoscope, 73, 75
Periscope, 73
PETZVAL'S, 18, 43, 59, 60, 68, 72
Spherical, 73
telephotographic, 86
telescope (Steinheil), 43
(see also *Anastigmat*)
Oblique pencils, 26
Old achromat defined, 46
two forms of, 41
Orthoscopic (or angle-true), 16, 29
image production, 31
Orthoscopy, 31
and intensity of illumination, 34
conditions for, 32
in compound lens, 36
in compound lens, sole condition for, 38
Orthostigmat, 80

Panoramic lens, 72
Pantoscope, 73, 75
Paraxial rays, 8
Pencils, oblique, 26
PENDLEBURY, C., on lenses, *33*
Periscope, 73
PETZVAL, Jos., writings referred to, 42 *49*, 122
brightness of images, 22
curvature of image, 57, 88
exposure, 59
objective, 18, 43, 59, 60, 68, 72
objective as double anastigmat, 72
pin-hole camera formula, 18
use of diamond as lens, 55
Pincushion distortion, 35
Pin-hole camera, 14, 17, 29
needles for, *17*
sizes of, 17
Planar, 81
Point-image, 20
PORTA, Giambattista della, early camera, 19

Portrait objective of Petzval, 61
first, 59
Protar, 67
Pupils, lens, 37, *37*

Quadruple objectives, 65

Radial astigmatism, 9, 24
focal line, 24
RAYLEIGH, Lord, writings referred to, *16*
Rays, chief, 29
Rectification of image, 26
Rectilinear (Dallmeyer's), 75
Rapid, 86
Rectilinear, meaning of term, 29
Refraction, table of indices of, 51
Refractive qualities of glass, 45
Residual dispersion (see *Secondary spectrum*), 41
Retouching lenses, 123
ROHR, M. von, writings referring to, *34*, *54*, *65*, *93*
on triplets, *54*
examples of triplets, *65*
ROSS, *Concentric* lens, 56, *75*, 86
Satz-anastigmat, 66
Universal Symmetrical, 86
Wide-angle Symmetrical, 85
RUDOLPH, P., *Anastigmat*, 62, 63, 76
orthoscopy, *39*
Planar, 81
principle, 62, 64, 65
Unar, 83
use of negative correcting lens, 91

Satz-anastigmat, 66
Goerz's, 78
Zeiss's, 66, 79, 81
SCHOTT, 45, 50, 51
SCHRÖDER, writings referred to, *57*
anastigmats, 63, 85
Concentric lens, 56, 75, 76, 85
use of two separated lenses, 57
Secondary spectrum, 41, 52
SEIDEL, L. von, writings referred to, *7*, *12*, *39*, 41, *49*, 103, 107
achromatism and flat images, 55
conditions and theory referred to, 7 11, 12, *21*, 26, 29, 40, *43*, 47, 48, 49, 87, 88, 103
fourth, considered, 47
fourth, considered for two-lens combination, 47
fourth, old glasses cannot satisfy, 49
curvature of image, 57
trigonometrical formulae of, 122
Sine-condition (Frauenhofer), 11, *21*, *39*, 43, *43*, 112, 116
Sphere-lens, 30
Spherical aberration, 7, 8, 31, 32, 40
chromatic differences of, *40*
Spherical aberration, correction of, for centre of stop, 31, 32
oblique (coma), 7, 8
Spherical objective, 73
STEINHEIL, writings referred to, *43*, 130
Aplanat, 68, 73
Aplanat as double-objective, 72
on glass (ref.), 45
opposed aberrations, 62, 87
Orthostigmat, 80
Periscope, 73
principle, 61
telescope objective, 43
use of negative correcting lens, 91
wide angle and large aperture-ratio, 74
Stigmatic, meaning of term, 4
Stigmatic lens (Dallmeyer), 86, 88, 89, 90
Stop, correction for centre of, 31, 32
use of front, 26
use of hind, 35
influence of, on aperture-ratio, 35
on flatness of image, 24
on size of field, 35
STREHL, on Diffraction Theory in Geometrical Optics, *16*, *30*
Surface, aberrationless, 21
convergence and divergence-producing, 64, 65
curvature of focal, 10
SUTTON, *Panoramic lens*, 72
use of negative lens in triplet, 91
Symmetrical objective, definition of, 36 (see *Objectives, Anastigmat*)

Table of refraction and dispersion equivalents, 51
Tangent condition, 33, 35
Tangential focal line, 24
TAYLOR, objective, 90
method of correcting with negative lens, 90-93
opera-glass as enlarging lens, 99
Telephotographic lenses, 94
advantages of, 101
THIESEN, writings referred to, 11, 115
Trigonometrical formulae of Seidel, 122
Triple achromatic objective, 86
Triple-cemented lenses, 65

Unar, 83
Unsymmetrical objective defined, 36
of two members, 59 (see *Objectives, Anastigmat*)

VOIGTLÄNDER, *Collinear*, 79, 86
Euryscope, 75
Petzval objective, 59, 68
VOIT, writings referred to, 45, 130

WAGNER, pin-hole camera experiments, 18

Wide-angle Rectilinear objective, 86
Wide-angle Symmetrical objective, 87
Work, principle of division of, 5, 35, 61

ZEISS, *Anastigmat*, 62, 63, 64, 76
Anastigmat, as double-objective, 72
Anastigmat, convertible, 66, 79, 81
Planar, 81
Protar, 67
teleobjective, 101
Unar, 83
Zones of lens, effect of various, 28

LIBRARY OF THE UNIVERSITY OF CALIFORNIA

THE END

Printed by R. & R. CLARK, LIMITED, *Edinburgh*.

WORKS BY PROF. SILVANUS THOMPSON, D.Sc.

PRINCIPAL AND PROFESSOR OF PHYSICS IN THE TECHNICAL COLLEGE, FINSBURY

LIGHT, VISIBLE AND INVISIBLE

Illustrated. Crown 8vo. 6s. net.

LIGHT.—"A successful attempt to bring a very recondite subject into the open. . . . The book is excellently produced, and is alive with helpful diagrams and clever portraits."

ELECTRICAL ENGINEER.—"We can recommend this little volume both to the general reader and to the student who wishes to get a true grasp of the ascertained facts about light."

ELEMENTARY LESSONS IN ELECTRICITY AND MAGNETISM

Illustrated. Fcap. 8vo. 4s. 6d.

NATURE.—"A really admirable attempt to place before students the modern doctrines concerning electricity and magnetism in a popular but reasonably accurate form."

LONDON: MACMILLAN AND CO., LIMITED.

MACMILLAN AND CO.'S PUBLICATIONS.

ON LIGHT. The Burnett Lectures. By Sir GEORGE GABRIEL STOKES, M.A., F.R.S., etc., Fellow of Pembroke College, and Lucasian Professor of Mathematics in the University of Cambridge. Crown 8vo. 7s. 6d.

LIGHT. A Course of Experimental Optics, chiefly with the lantern. By LEWIS WRIGHT. Illustrated. Crown 8vo. 7s. 6d.

THE INDUCTION COIL IN PRACTICAL WORK, INCLUDING RÖNTGEN X-RAYS. By LEWIS WRIGHT. With Illustrations. Crown 8vo. 4s. 6d.

POLARIZATION OF LIGHT. By WILLIAM SPOTTISWOODE, F.R.S. Illustrated. Crown 8vo. 3s. 6d.

THE THEORY OF LIGHT. By THOMAS PRESTON, M.A., Fellow of the Royal University of Ireland, and Professor of Natural Philosophy, University College, Dublin. Illustrated. 8vo. 15s. net.

LIGHT. A Series of Simple Experiments. By ALFRED M. MAYER and CHARLES BARNARD. Illustrated. Crown 8vo. 2s. 6d.

SUNSHINE. By AMY JOHNSON. Illustrated. Crown 8vo. 6s.

OPTICS: A Manual for Students. By A. S. PERCIVAL, M.A., M.B., Trinity College, Cambridge. Crown 8vo. 10s. net.

A TREATISE ON OPTICS. By S. PARKINSON, F.R.S. Fourth edition. Crown 8vo. 10s. 6d.

LONDON: MACMILLAN AND CO., LIMITED.

UNIVERSITY OF CALIFORNIA LIBRARY

This book is DUE on the last date stamped below.

Fine schedule: 25 cents on first day overdue

NOV 11 1947

DAVIS
INTERLIBRARY LOAN

LD 21–100m-12,'46(A2012s16)4120

YC 13806